LACAVA

KUBITOP
vanity-top sink
K24
K24S

Specifications:

Installation:	22” or 19” deep vanity-top
Exterior Dimensions:	K24 - 24”w x 22”d x 6 1/4”h K24S - 24”w x 19”d x 6 1/4”h (for wall-mount faucets only)
Material:	Solid surface
Weight:	34 lbs
Overflow:	Yes
Finishes:	M - Matte white G - Gloss white
Faucet Holes for K24:	00 - no hole 01 - one centered hole 02 - two hole - center and right, 4” spread 03 - three hole, 8” spread
Faucet Hole Size for K24:	Ø 1 3/8”
Drain Hole Size:	Ø 1 3/4”
Cutout Size:	K24 - 22” x 19” K24S - 22” x 16” (templates available upon request)

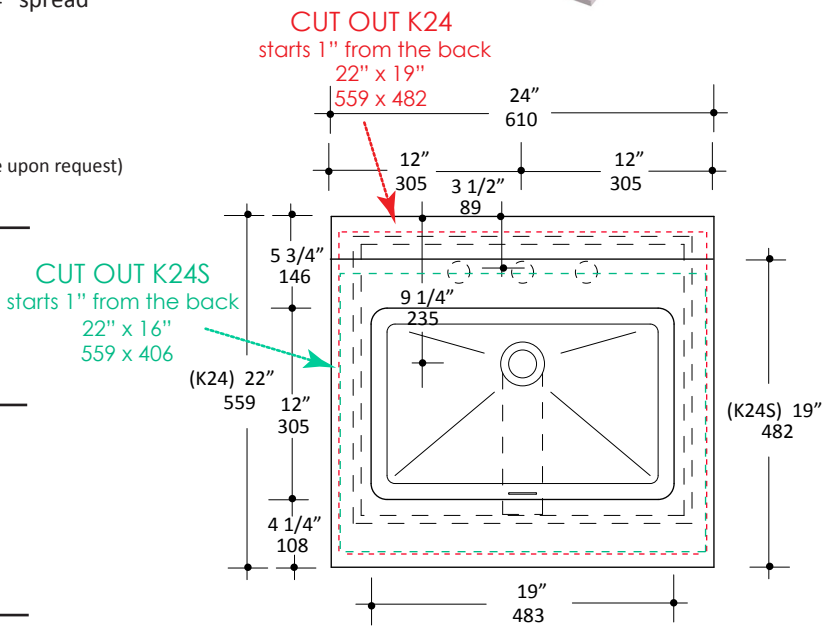

Features:

- Stain, scratch, chemical, impact resistant
- Optional backsplash available

Codes + Standards:

- Meets and exceeds applicable national codes and standards

ADA compliant when installed to specific requirements of this regulation

Recommended Items:

- BKS - 6” Backsplash G - gloss, M - matte
- Furniture for K24 22” deep sinktop
  - KBT-ADA-24 - Wall-mount vanity with two doors
  - KUB-W-24 - Floor-standing or wall mounted vanity with drawers
  - KUB-W-24B - Floor-standing or wall mounted vanity with drawers
  - PUN-W-24 - Wall-mount under-counter vanity with two drawers
  - NAV-UN-24 - Free-standing under-counter vanity (If paired, this vanity must be ordered together with the sink top)
- Furniture for K24S 19” deep sink (not suitable for deck-mount faucet)
  - KBT-ADA-24S - Wall-mount vanity with two doors
- European drain with overflow
  - 7100-12
  - 7100-16OF
  - 7100-13OF

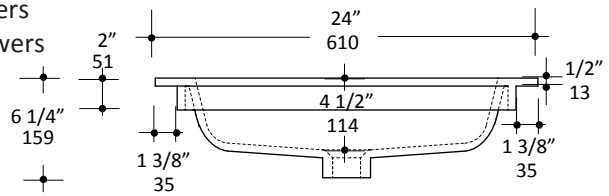

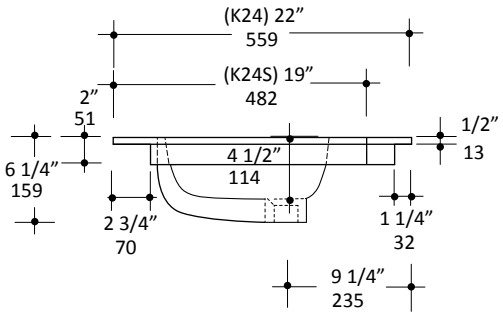

Care + Maintenance:

- To prevent damage to the solid surface material, hot objects and open flame should not be placed in direct contact with the surface

Click Here to find out more about proper care and maintenance

LACAVA reserves the right to revise any dimension or information on this sheet without notice. Dimensions are nominal and may vary within an industry accepted tolerance of 1/4”.
Drawings provided herein are meant to give the user an idea of the product and are not made to scale.
Revised: 12/13/2023