GERBER

40-070
Viper™
Single Handle Lavatory Faucet

GREEN UPC Water Efficiency

NSF/ANSI 372

WaterSense Meets EPA Criteria Certified by IAPMO R&T

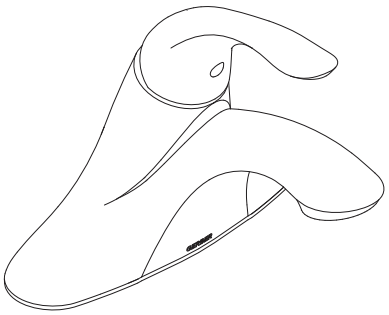

40-070 Shown

Features:

- Three hole installation
- Ceramic disc cartridge GA507906N
- Includes 50/50 touch down drain GA505219P with color-matching cap and black tailpiece
- 4″ center to center installation range
- Chrome or brushed nickel finish
- 1.5gpm (5.7L/min) pressure compensating aerator GA500966N @ 60 psi
- Lead free waterway per NSF/ANSI 372
- Fully ADA compliant
- Limited lifetime warranty

Standards & Certifications:

- ASME A112.18.1
- NSF/ANSI 372
- IAPMO/cUPC
- ICC/ANSI A117.1
- EPA/Watersense
- Mass Code

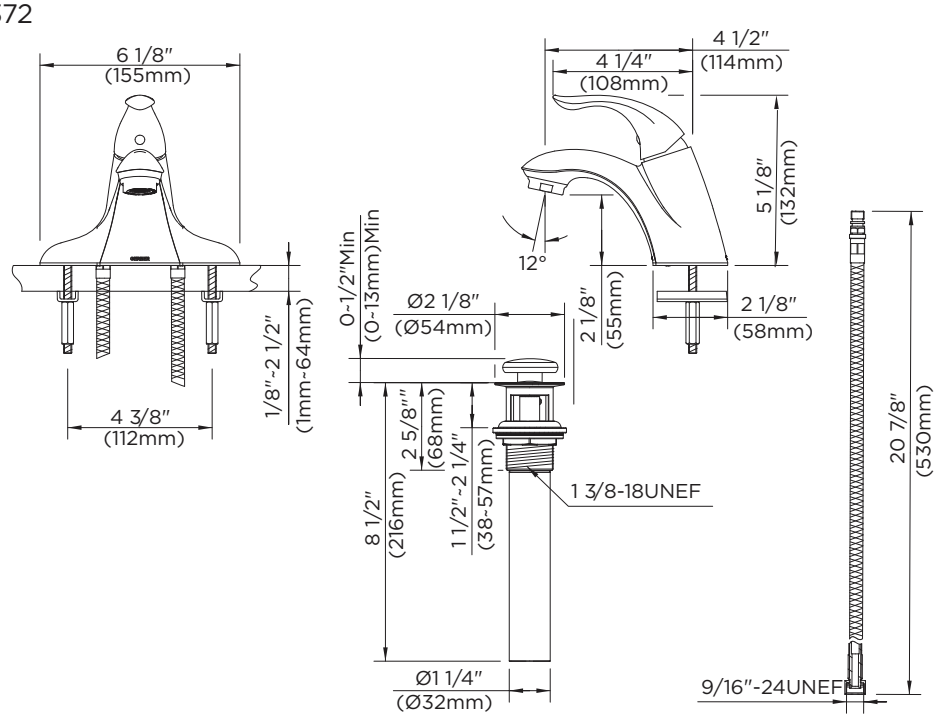

Catalog Numbers:

40-070	Chrome
40-070-BN	Brushed Nickel

Prefixes Available:

None

Suffixes Available:

-BN	Brushed Nickel

Job Name	
Date	
Model Specified	
Quantity	
Customer	
Contractor	
Architect/engineer	

Gerber Toll Free Technical Support: 1-888-648-6466
www.gerberonline.com

Because we are committed to continual product improvement, specifications are subject to change without notice.