Your Peace of Mind is Our Top Priority®

Product information presented here reflects conditions at time of publication. Consult factory regarding discrepancies or inconsistencies.

ZOELLER®
PUMP COMPANY
Zoeller Family of Water Solutions™

MAIL TO: P.O. BOX 16347 • Louisville, KY 40256-0347
SHIP TO: 3649 Cane Run Road • Louisville, KY 40211-1961
(502) 778-2731 • 1 (800) 928-PUMP • FAX (502) 774-3624

SECTION: 2.20.035
FM0973
0114
Supersedes
0312

visit our web site: www.zoeller.com

COMPARE THESE FEATURES

- Non-clogging engineered plastic vortex impeller design
- Corrosion resistant powder coated epoxy finish
- Durable cast construction. Cast switch case, motor, pump housing and base. No sheet metal parts to rust or corrode.
- Castings - All cast iron class 25-30 25000# tensile strength
- Stainless steel screws, guard, handle, arm and seal assembly
- Float operated 2-pole mechanical switch
- Motor - Permanent split capacitor, 60 Hz, 1725 RPM, oil-filled, hermetically sealed, automatic reset thermal overload protection
- Bearings - Upper & lower oil fed cast iron
- Carbon and ceramic shaft seal
- Entire unit pressure tested after assembly.
- Watertight neoprene "□" ring between motor and pump housing
- Maximum temperature for effluent or dewatering 130°F - 54°C
- Passes ½ inch spherical solids
- No screens to clog
- Standard cord length 15 ft. (UL Listed)
- 1½" NPT Discharge (1½" X 2" PVC Adapter included with BN & BE Models)
- On point - 9½"
- Off point - 3"
- Major width - 10 1/8"
- Height - 12"

SIMPLEX AND DUPLEX SYSTEMS AVAILABLE

PACKAGED SYSTEMS AVAILABLE

Note: The sizing of effluent systems normally requires variable level float(s) controls and properly sized basins to achieve required pumping cycles or dosing timers with nonautomatic pumps.

98 Cast Iron Series

"FLOW-MATE"

(FOR PUMP PREFIX IDENTIFICATION SEE NEWS & VIEWS 0052)

FOR SEPTIC TANK
LOW PRESSURE PIPE (LPP)
AND ENHANCED FLOW STEP SYSTEMS

EFFLUENT

OR DEWATERING PUMP

SUBMERSIBLE

1½" NPT DISCHARGE

DESIGNED • MACHINED • ASSEMBLED IN THE USA

Tested to UL Standard UL778 and Certified to CSA Standard C22.2 No. 108

MODELS AVAILABLE

- Automatic or Nonautomatic
- ½ HP, 1 Ph., 115V or 230V
- Available with Piggyback Variable Level Float Switch.

SSPMA Certified PUMP 50 YEARS

MODEL 98

POWDER COATED TOUGH™

MODEL BN98

© Copyright 2014 Zoeller Co. All rights reserved.

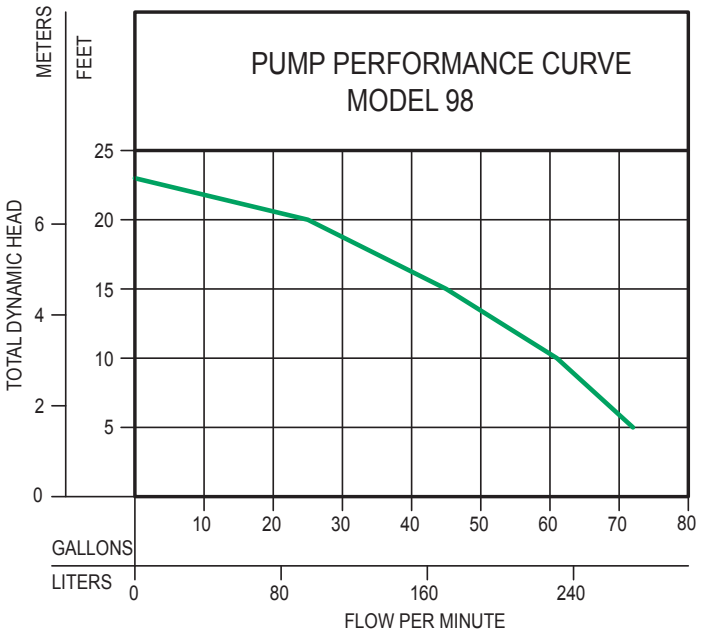

TOTAL DYNAMIC HEAD/FLOW PER MINUTE EFFLUENT AND DEWATERING

MODEL		98	
Feet	Meters	Gal.	Liters
5	1.5	72	273
10	3.0	61	231
15	4.6	45	170
20	7.1	25	95
Shut-off Head:		23 ft.(7.0m)	

009971

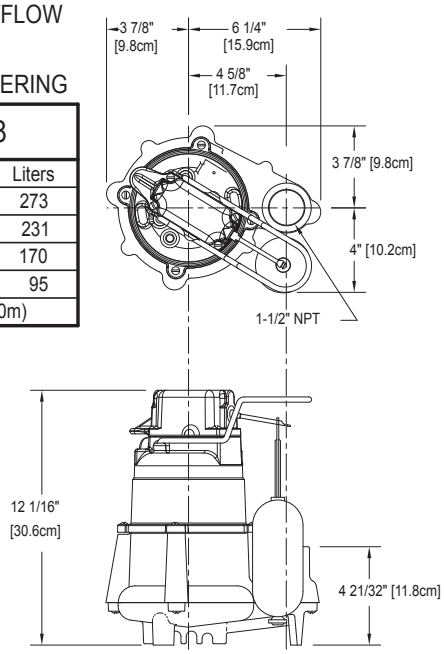

SK1102

CONSULT FACTORY FOR SPECIAL APPLICATIONS

- Electrical alternators, for duplex systems, are available and supplied with an alarm
- Mechanical alternators, for duplex systems, are available with or without alarm switches
- Variable level float switches are available for controlling single and three phase systems
- Double piggyback variable level float switches are available for variable level long cycle controls
- Refer to FM1922 and FM0806 for temperatures above 130°F

98 Series				Control Selection	
Model	Volts-Ph	Mode	Amps	Simplex	Duplex
M98	115 1	Auto	9.4	1	4
N98	115 1	Non	9.4	2 or 3	4
D98	230 1	Auto	4.7	1	4
E98	230 1	Non	4.7	2 or 3	4

SELECTION GUIDE

1. Integral float operated mechanical switch, no external control required.
2. For automatic use single piggyback variable level float switch or double piggyback variable level float switch. Refer to FM0477.
3. See FM1228 for correct model of simplex control panel.
4. See FM0712 for correct model of duplex control panel or FM1663 for a residential alternator system.

For information on additional Zoeller products refer to catalog on Piggyback Variable Level Switches, FM0477; Electrical Alternator, FM0486; Mechanical Alternator, FM0495; Sump/Sewage Basins, FM0487; Single Phase Simplex Pump Control, FM1596; Alarm Systems, FM0732.

⚠ CAUTION

All installation of controls, protection devices and wiring should be done by a qualified licensed electrician. All electrical and safety codes should be followed including the most recent National Electrical Code (NEC) and the Occupational Safety and Health Act (OSHA).

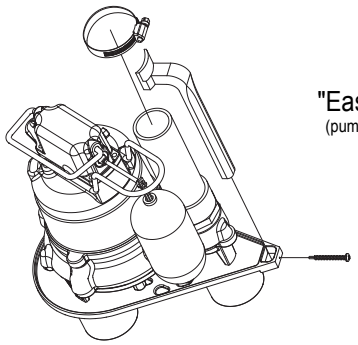

"Easy assembly"
(pump & discharge pipe not included.)

OPTIONAL PUMP STAND P/N 10-2421

- Reduces potential clogging by debris.
- Replaces rocks or bricks under the pump.
- Made of durable, noncorrosive ABS.
- Raises pump 2" off bottom of basin.
- Provides the ability to raise intake by adding sections of 1½" or 2" PVC piping.
- Attaches securely to pump.
- Accommodates sump, dewatering and effluent applications.

NOTE: Make sure float is free from obstruction.

RESERVE POWERED DESIGN

For unusual conditions a reserve safety factor is engineered into the design of every Zoeller pump.

ZOELLER®
PUMP COMPANY

MAIL TO: *P.O. BOX 16347 • Louisville, KY 40256-0347*
SHIP TO: *3649 Cane Run Road • Louisville, KY 40211-1961*
(502) 778-2731 • 1 (800) 928-PUMP • FAX (502) 774-3624

Your Peace of Mind is Our Top Priority®

visit our web site: www.zoeller.com

© Copyright 2014 Zoeller Co. All rights reserved.