Rev	Design Change Note	Author	Date
001	First issue appeoved	PG	2019-09-11

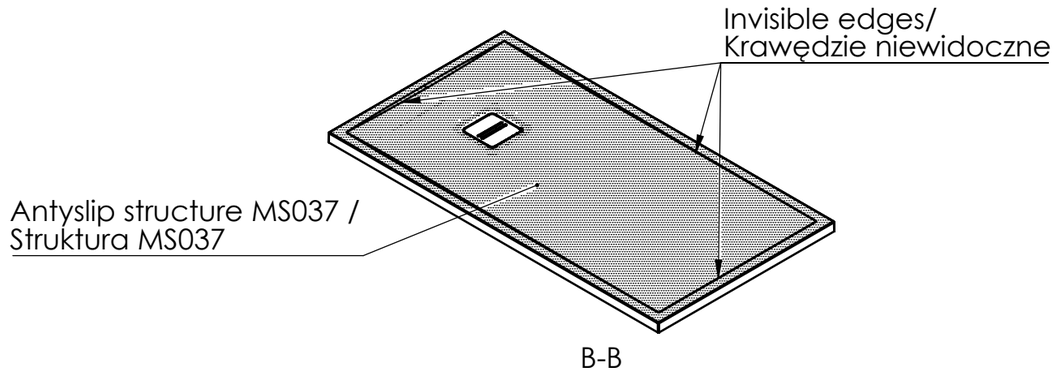

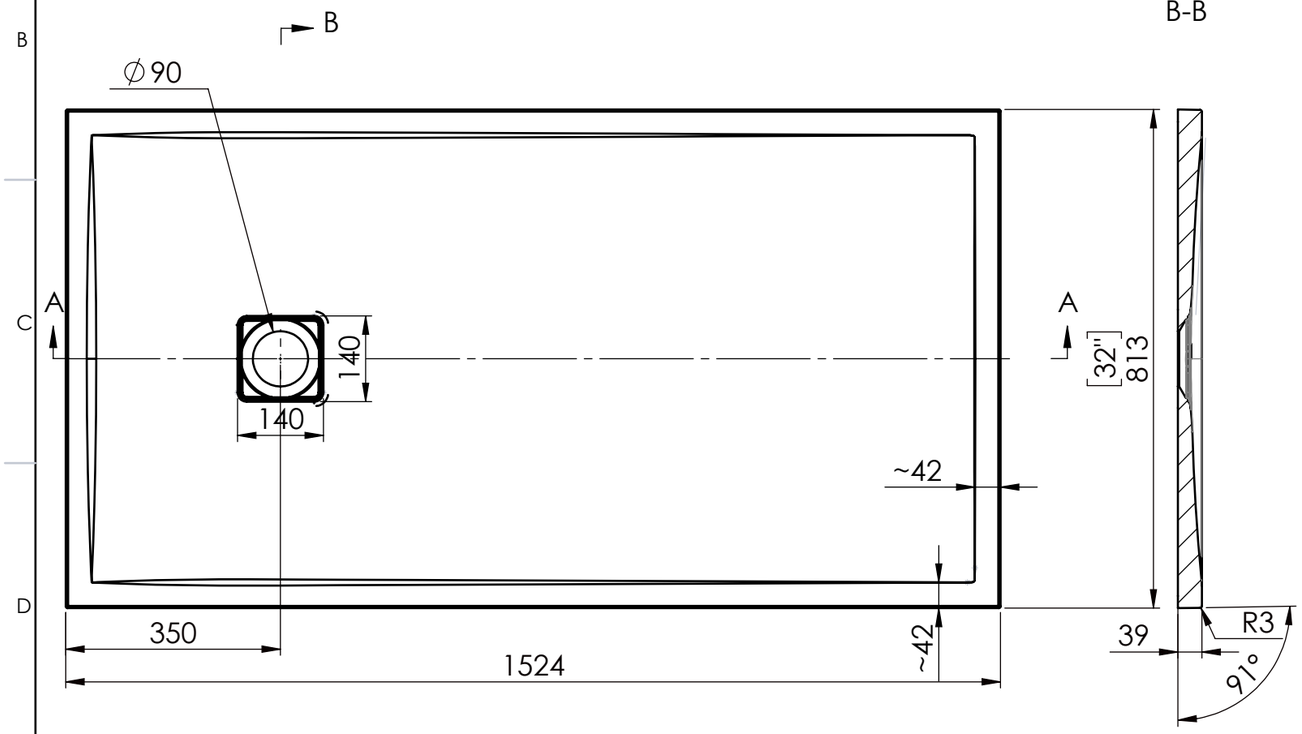

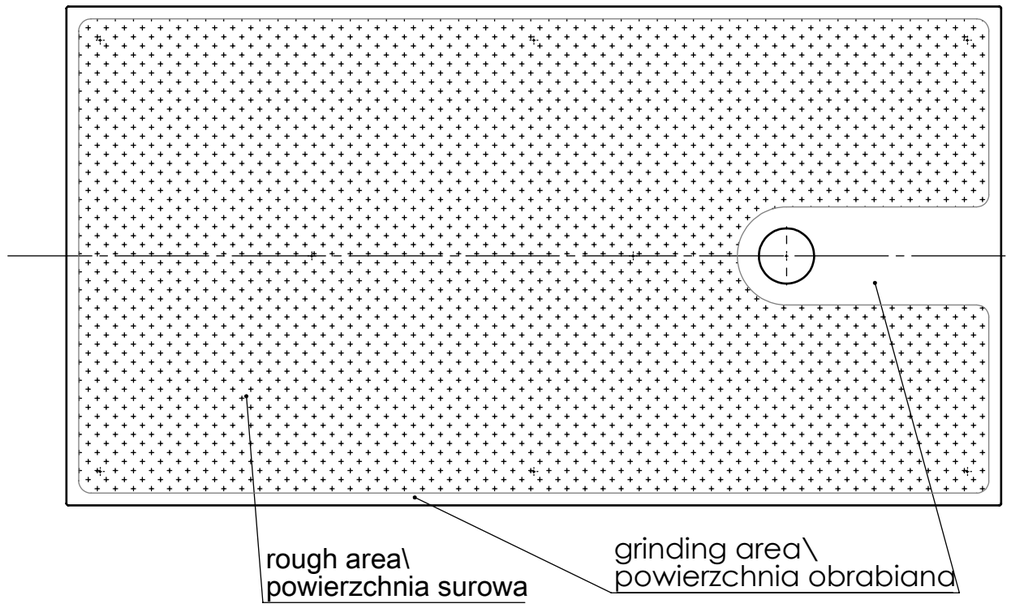

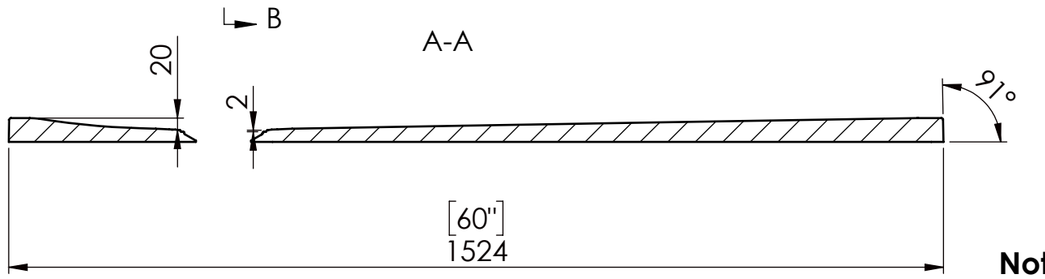

Notes/Uwagi:

1. Steel plate - see drawing 10330000054/Metalowa przykrywka - patrz rysunek 103300000054

Tolerance length/width		+5/0 mm	Drawn by: Paweł G	Created Date: 2018-12-19	Checked by: Zbigniew P
Tolerance height		+2/-2 mm	Project status: Approved	Client: USA STANDARD	
Tolerance plane bending	≤1200 mm	+2/-2 mm			
	≥1200 mm	+3/-3 mm			
Tolerance thickness		+2/-2 mm			
Tolerance grinding		+2/0 mm			
Tolerance feet location		+7/-7 mm			
Tolerance holes location		+2/-2 mm			
Tolerance holes diameter		+1/-1 mm			

Art. Name: 0024 60"x32"
Art. No: 6600671530xx
Mould No: FW470153
Customer ID:

Material volume[mm³]	Overflow	Taphole	Main dimensions L x W / H [mm]	Drain
40723178	NO	0	1524 x 813 / 39	Cover
Surface area[mm²]	**Sheet Size**	**Scale**		**Current revision**
2642472	A3	1:10		001

MARmite

This document must not be copied without our written permission, and the contents thereof must not be imparted to a third party nor be used for any unauthorized purpose. Contravention will be prosecuted.