Rev	Design Change Note	Author	Date
001	First issue approved	PG	2019-09-11

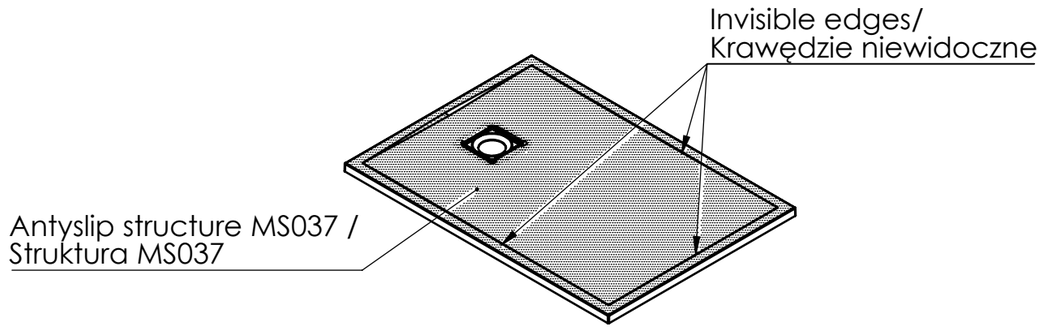

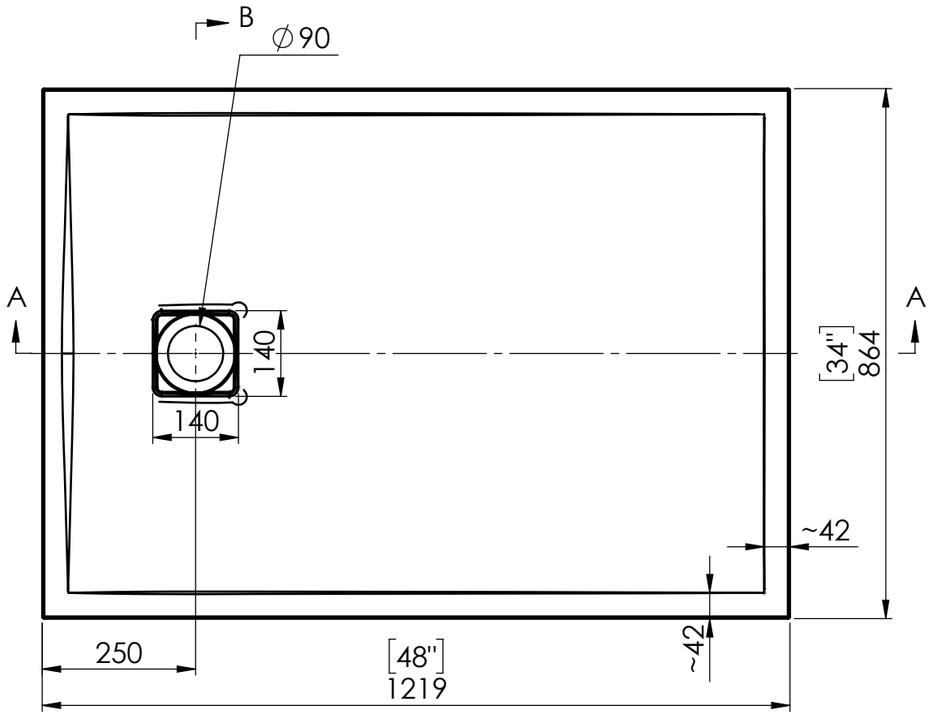

A-A

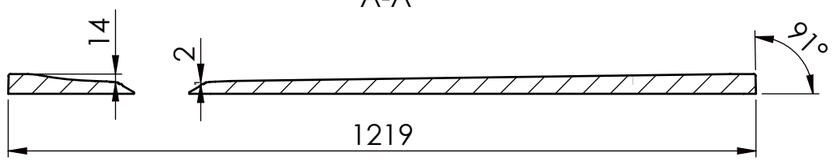

B-B

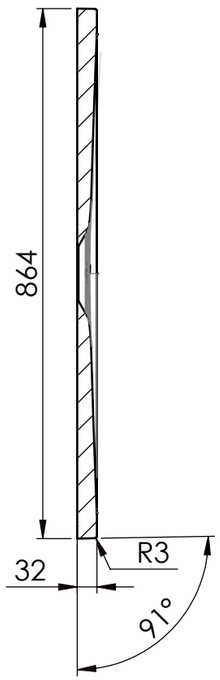

Bottom view/
Widok z dołu

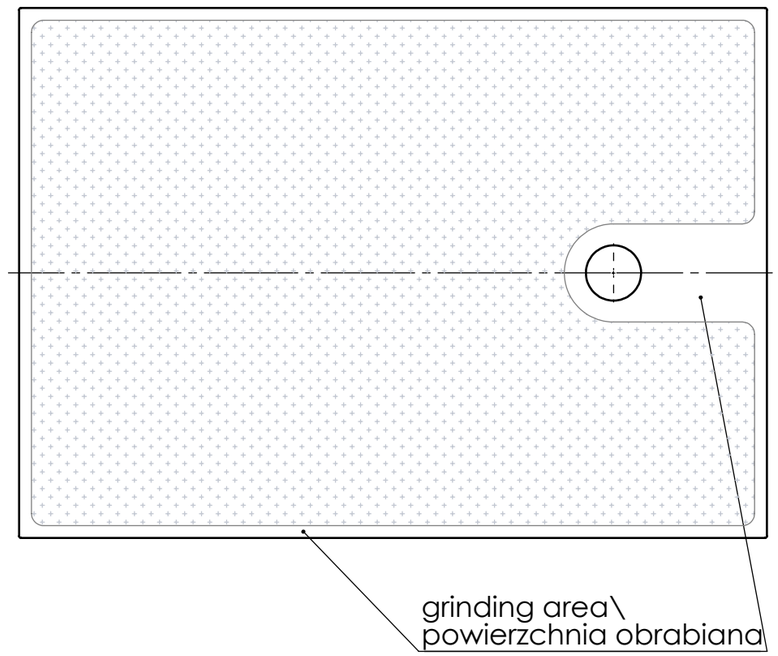

Notes/Uwagi:

1. Steel plate - see drawing 10330000054/Metalowa przykrywka - patrz rysunek 10330000054

Tolerance length/width		+5/0 mm
Tolerance height		+2/-2 mm
Tolerance plane bending	≤1200 mm	+2/-2 mm
	≥1200 mm	+3/-3 mm
Tolerance thickness		+2/-2 mm
Tolerance grinding		+2/0 mm
Tolerance feet location		+7/-7 mm
Tolerance holes location		+2/-2 mm
Tolerance holes diameter		+1/-1 mm

Drawn by	Created Date	Checked by
Paweł G	2019-04-04	Zbigniew P
Project status	**Client**	
Approved	USA STANDARD	

Art. Name: 0024 48"x34"

Art. No: 6600681230xx

Mould No: FW471123

Customer ID:

MARmite

Material volume[mm³]	Overflow	Taphole	Main dimensions L x W / H [mm]	Drain
29662059	NO	0	1219 x 864 / 32	Cover
Surface area[mm²]	**Sheet Size**	**Scale**		**Current revision**
2222666	A3	1:10		001

This document must not be copied without our written permission, and the contents thereof must not be imparted to a third party nor be used for any unauthorized purpose. Contravention will be prosecuted.