AXOR

hansgrohe

Brand	hansgrohe
Art. Name	**Croma 100** Croma 100 Wallbar Set 3-Jet, 2.5 GPM
Art. Nr.	04945000
Surface	chrome
Pos.	1

Product Picture

Drawing

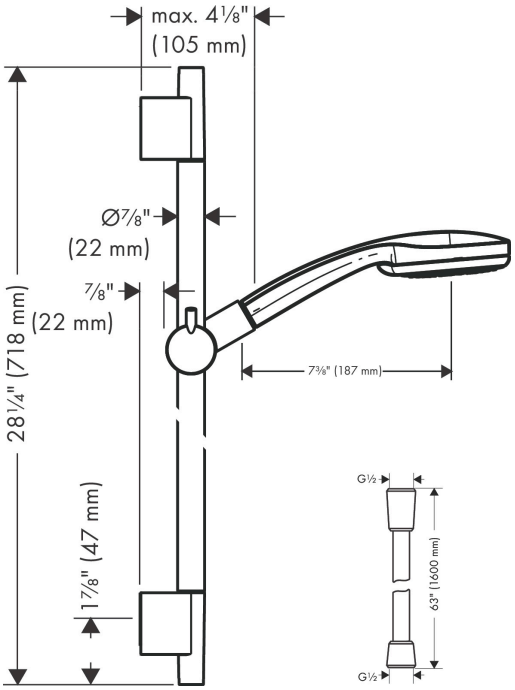

Technology

Quick Clean

Features

- Consists of: Wallbar, Handshower, Handshower hose
- Spray modes: Full, Pulsating Massage, Intense Turbo
- Continuous spray mode adjustment
- Angle-adjustable holder pivots left and right, slides easily and locks in place
- Flow: 2.5 GPM (9.5 L/Min)
- Shower bar diameter: 22 mm
- wall mounted: Fastens with screws