TRONIC 6000C WH17 & WH27 Electric Tankless Water Heaters

Engineering Submittal Sheet

BOSCH

Overview and Certifications

c UL US

LOW-LEAD UPC ®

Engineering Specifications

Water heater shall be a Model TRONIC 6000C WH17 or, WH27.

Installation shall consist of ___Model TRONIC 6000C WH17 electric tankless water heaters as distributed by Bosch Thermotechnology Corp. and 97% thermal efficiency. Supply voltage shall be 240VAC (208VAC, 220VAC) with a maximum output of 17.25kW.

Installation shall consist of ___Model TRONIC 6000C WH27 electric tankless water heaters as distributed by Bosch Thermotechnology Corp. with a thermal efficiency of 97%. Supply voltage shall be 240VAC (208VAC, 220VAC) with a maximum output of 26.85kW.

The tankless water heaters shall be UL listed for the US and UPC certified.

CONSTRUCTION
Water heater shall be electricity powered with compact tankless design for whole house operation and an efficiency rating of 97%. Primary heat exchanger shall be made from composite material and the elements shall be made from -sheathed copper. Unit shall be protected by a tough sheet metal housing. Heat exchanger shall be rated for maximum working pressure not less than 150 psig. Water heater shall be equipped with a flow turbine. Water connections for inlet and outlet shall be ¾” NPT male.
The controls shall contain an external set point temperature selector, display screen and a high temperature safety cut-out.

The controls shall not compensate for heat loss, pipe run, and other factors affecting the outlet temperature at end use. Unit shall be equipped with a flow turbine and a temperature sensor for constant output temperature. A red light shall indicate when the unit is powering one or more elements.

INSTALLATION
All aspects of installation of Water Heater shall be in strict accordance with manufacturer’s instructions. Materials shall conform to all manufacturer’s recommendations including electrical connections and wiring.
Water heater piping shall be field constructed of materials as specified. Water heater shall be installed with individual isolating shutoff valves for service and maintenance.

MODE OF OPERATION
The heater shall include integral factory wired operating controls to control all operation and energy input. Control of discharge water temperature shall be set through an internal set point with a field adjustment of 95 to 131 degrees F. Heater shall be capable of maintaining the temperature set point +/- 3 degrees F. This shall be accomplished by switching or pulsing the power to the electrical elements.

WARRANTY
The heating modules shall carry a 5 year limited warranty.
All other parts and components shall carry a 2 year limited warranty against defects in materials or workmanship.

Bosch Thermotechnology Corp.
Londonderry, NH • Ft. Lauderdale, FL

Tel: 1-866-642-3198 Fax: 1-603-965-7581 www.boschheatingandcooling.

Technical Data

Description	Unit	WH17	WH27
Part number	–	7736503050	7736503051
Voltage supply	VAC	240	240
Amperage	A	2 x 40	3 x 40
Maximum output	kW	17.25	26.85
Maximum output at 220V	kW	15.00	22.50
Maximum output at 208V	kW	13.00	20.00
Minimum recommended wire size	AWG	8	8
Thermal efficiency	%	97	97
Temperature control range	° F	95 - 131	95 - 131
Maximum inlet water temperature*	° F	≤ 86	≤ 86
Water pressure range	psi	15 - 150	15 - 150
Minimum flow rate	GPM	0.6	0.8
Inlet / Outlet connections	Inch	¾ NPT	¾ NPT
Weight (without water)	lbs	20	22
Certifications	–	c UL us	LOW-LEAD UPC

* Do not use heater for water temperature boosting applications

Display Screen

The display screen is defaulted to display set-point temperature in Imperial Units. The set-point temperature can be adjusted with use of the external set-point temperature selector.

For a licensed electrician, the display can be adjusted to display flow rate and can be changed to Metric units. These changes are made by a licensed electrician by making the appropriate adjustments on the dipswitch, as shown.

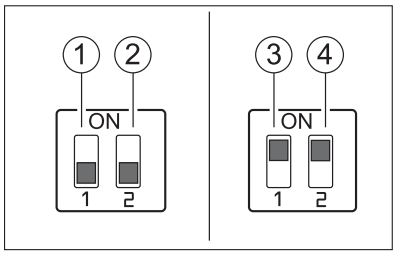

Display DIP Switch

[1] Metric units °C & liters per min
[2] Display Temp
[3] American units °F & GPM
[4] Display Flow

Bosch Thermotechnology Corp.
Londonderry, NH • Ft. Lauderdale, FL

Tel: 1-866-642-3198 Fax: 1-603-965-7581 www.boschheatingandcooling.com

Dimensions

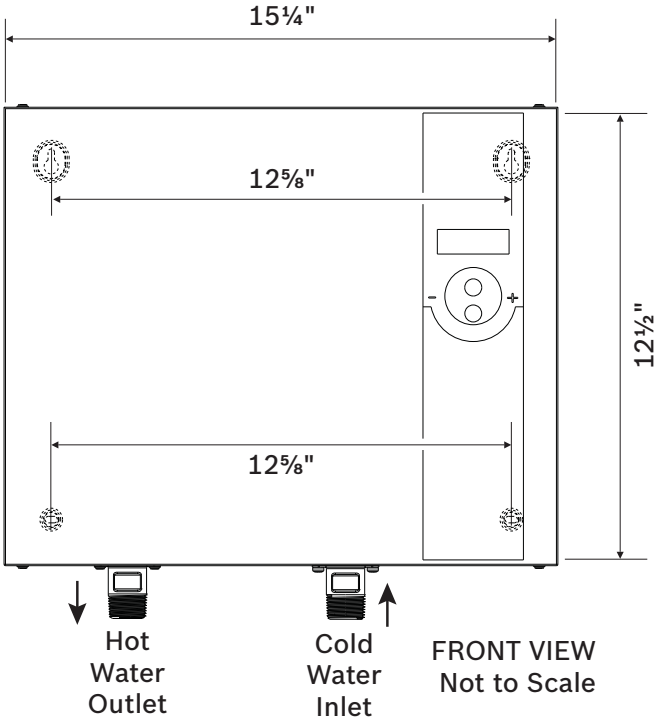

FRONT VIEW
Not to Scale

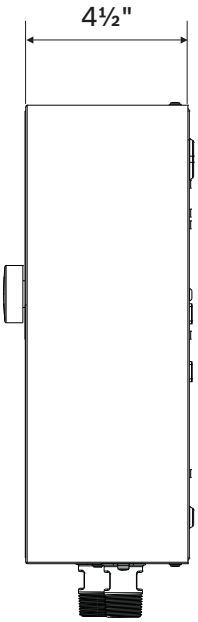

END/SIDE VIEW
Not to Scale

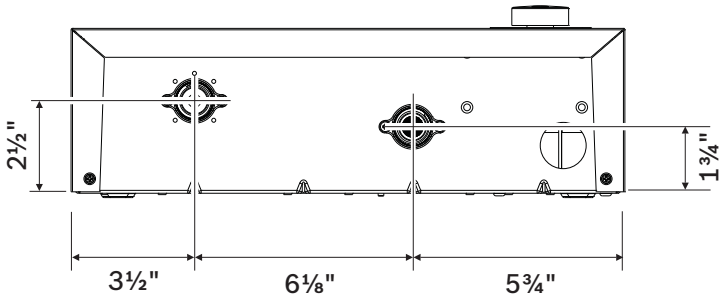

BOTTOM VIEW
Not to Scale

Bosch Thermotechnology Corp.
Londonderry, NH • Ft. Lauderdale, FL

Tel: 1-866-642-3198 Fax: 1-603-965-7581 www.boschheatingandcooling.com

Water Heating Capacity Curve

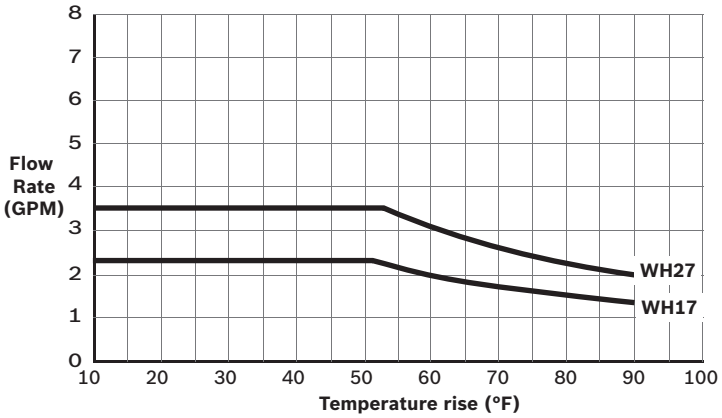

Water Heating Capacity Data		
Temperature Rise °F	Flow Rate GPM	
	WH17	WH27
35	2.3	3.5
45	2.3	3.5
55	2.1	3.3
65	1.8	2.8
75	1.6	2.4
90	1.3	2.0

Clearances

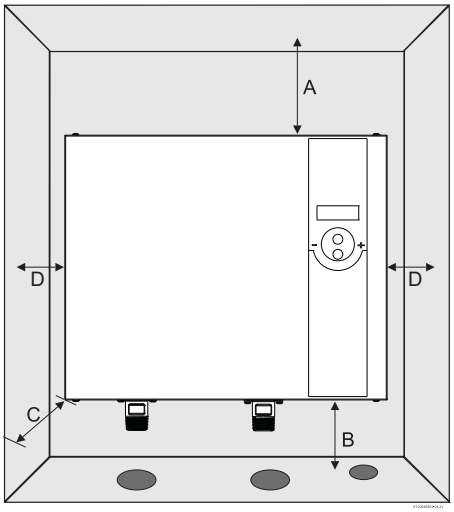

Front View

Description	Unit	Minimum clearance
Top clearance A	Inch	12
Bottom clearance B	Inch	6
Front clearance C	Inch	12
Side clearance D	Inch	0

Bosch Thermotechnology Corp.
Londonderry, NH • Ft. Lauderdale, FL

Tel: 1-866-642-3198 Fax: 1-603-965-7581 www.boschheatingandcooling.com

Installation Example

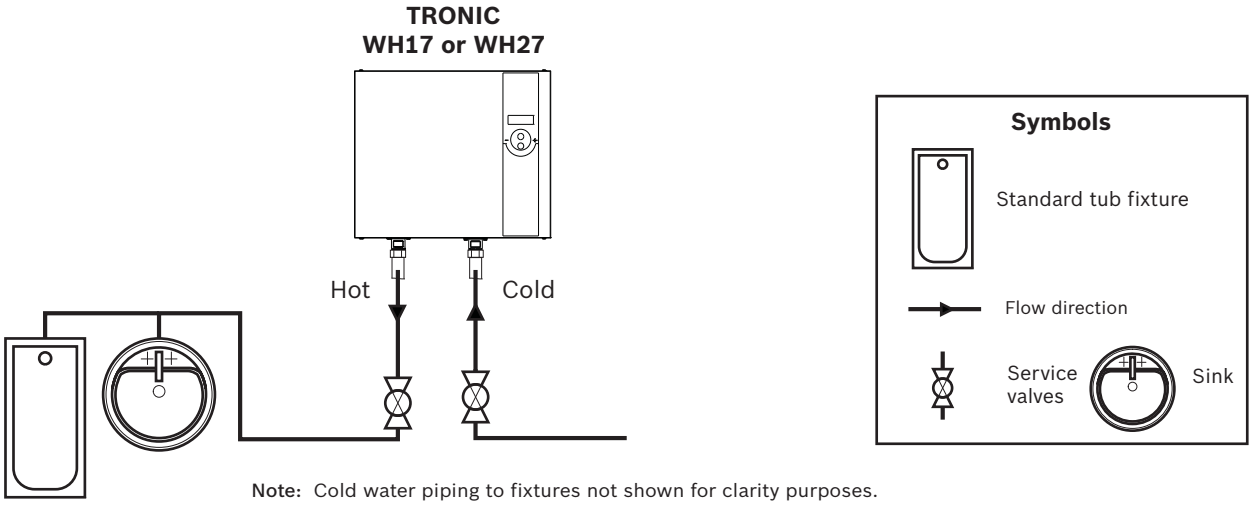

Note: Cold water piping to fixtures not shown for clarity purposes.

Components

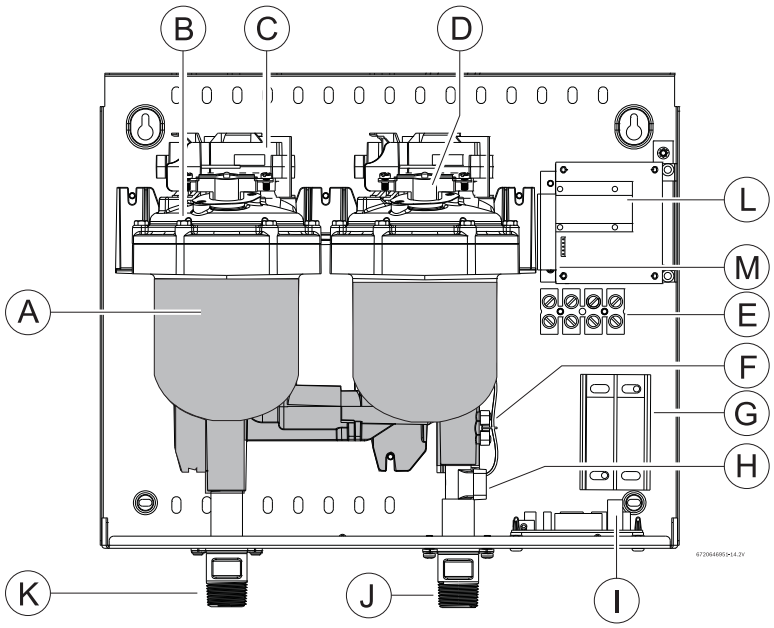

Components Legend

A	Heating module
B	Heating element assembly
C	Heating module P.C.B's
D	Double pole thermal cut-off (WH27) Single pole thermal cut-off (WH17)
E	6 position terminal block (WH27) 4 position terminal block (WH17)
F	Temperature sensor
G	Terminal block (CANADA ONLY)
H	Flow transducer
I	Control PCB
J	Cold water inlet
K	Hot water outlet
L	Display PCB
M	Display DIP switch

Bosch Thermotechnology Corp.
Londonderry, NH • Ft. Lauderdale, FL

Tel: 1-866-642-3198 Fax: 1-603-965-7581 www.boschheatingandcooling.com