TurboMax®

Instantaneous Indirect Water Heater

TURBOMAX INSTALLATION DRAWINGS

Revision January 2023

BASIC INSTALLATION DRAWING
FOR:
1 x TURBOMAX
1 x BOILER

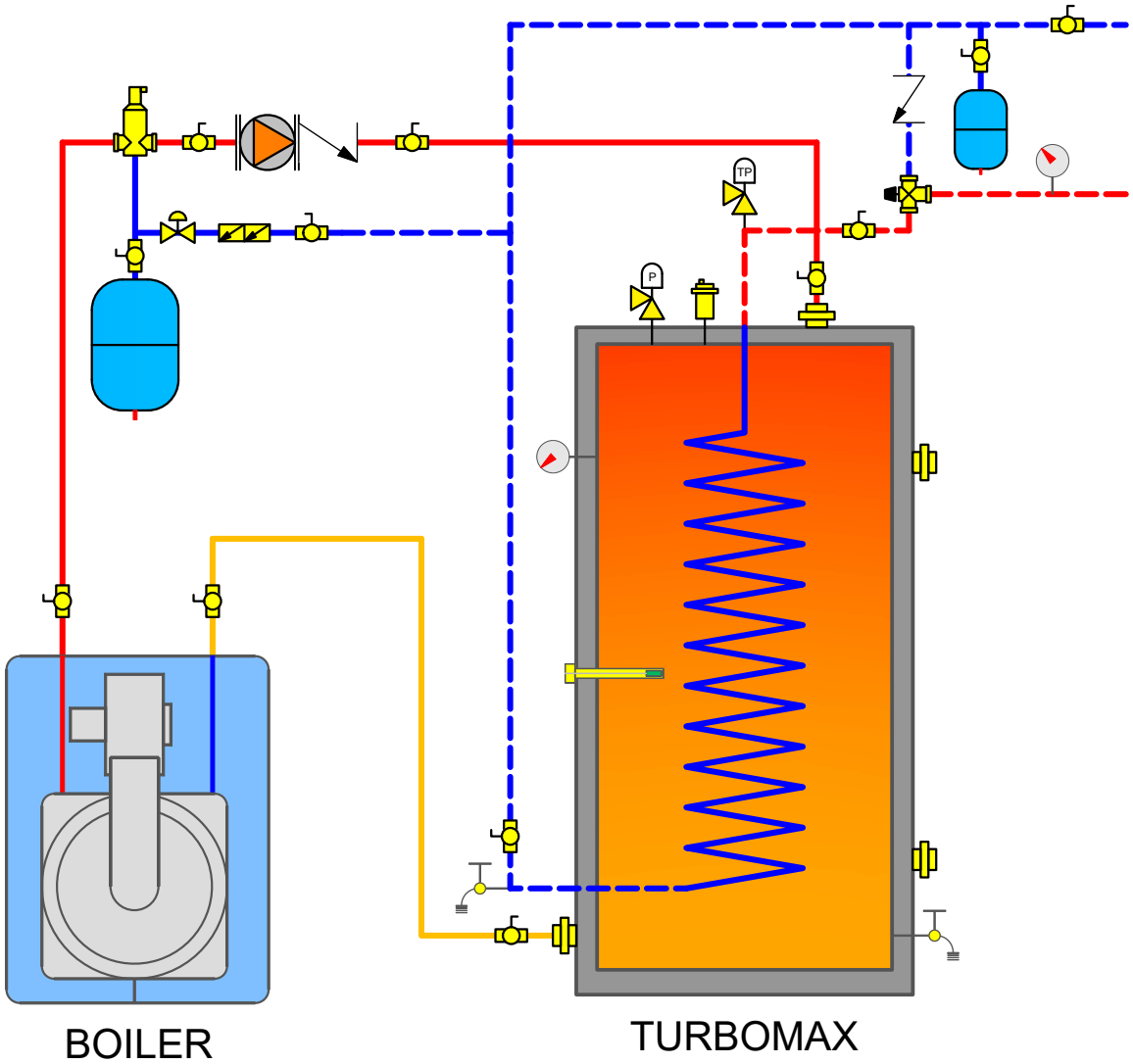

REQUIREMENTS

1. THE INSTALLATION MUST CONFORM TO LOCAL, STATE, PROVINCIAL, NATIONAL CODES. IN ANY CASE WHERE INSTRUCTIONS CONFLICT WITH THE ABOVE, LET THOSE CODES TAKE PRECEDENCE
2. THIS IS A BASIC PIPING SCHEMATIC. PLEASE CONSULT THE INSTALLATION MANUAL
3. INSTALL A SAFETY VALVE (TEMPERATURE & PRESSURE) ON THE DOMESTIC HOT WATER LINE, THE NEAREST POSSIBLE TO THE HOT WATER HEATER(S) CONNECTION(S) AND BEFORE ANY SHUT OFF VALVE
4. PIPE ALL THE SAFETY VALVES AND DRAIN VALVES TO THE DRAIN OR ACCORDINGLY TO THE CODE
5. WHEN A BACK FLOW PREVENTER OR WATER METER OR A PRESSURE REDUCING VAVLE IS USED ON THE DOMESTIC COLD WATER SUPPLY LINE, THEN A THERMAL EXPANSION TANK MUST BE INSTALLED BETWEEN THE WATER HEATER AND THIS DEVICE
6. THIS DRAWING IS NOT TO SCALE

SYMBOLS

BALL VALVE
CHECK VALVE
BACK FLOW PREVENTER
PRESSURE REDUCING VALVE
DRAIN COCK
BALANCING VALVE
AUTOMATIC AIR VENT
PUMP
AIR SEPERATOR
SENSOR WELL
EXPANSION TANK
THERMOMETER
PRESSURE RELIEF VALVE
TEMPERATURE & PRESSURE RELIEF VALVE
THERMOSTATIC MIXING VALVE

COLD WATER SUPPLY
DOMESTIC PREHEATED WATER / DHW RECIRCULATION
DOMESTIC HOT WATER
HEATING HOT WATER/FLUID
HEATING WATER/FLUID RETURN

BOILER CAPACITY : _____ BTU/H
MINIMUM REQUIRED NET CAPACITY : _____ BTU/H

PUMP CAPACITY : _____GPM @ _____ FEET OF HEAD

BOILER PIPE CONNECTION SIZE : _____ in
DHW TURBOMAZ PIPE CONNECTION SIZE : _____ in

BOILER MODEL : _____
TURBOMAX MODEL : _____

THERMO 2000
500 9th AVENUE
RICHMOND, QC, CA, J0B 2H0
T : 1 819 826-5613
F : 819 826-6370

BASIC INSTALLATION DRAWING FOR:
1 x TURBOMAX
1 x BTH ULTRA
2 x BASEBOARD

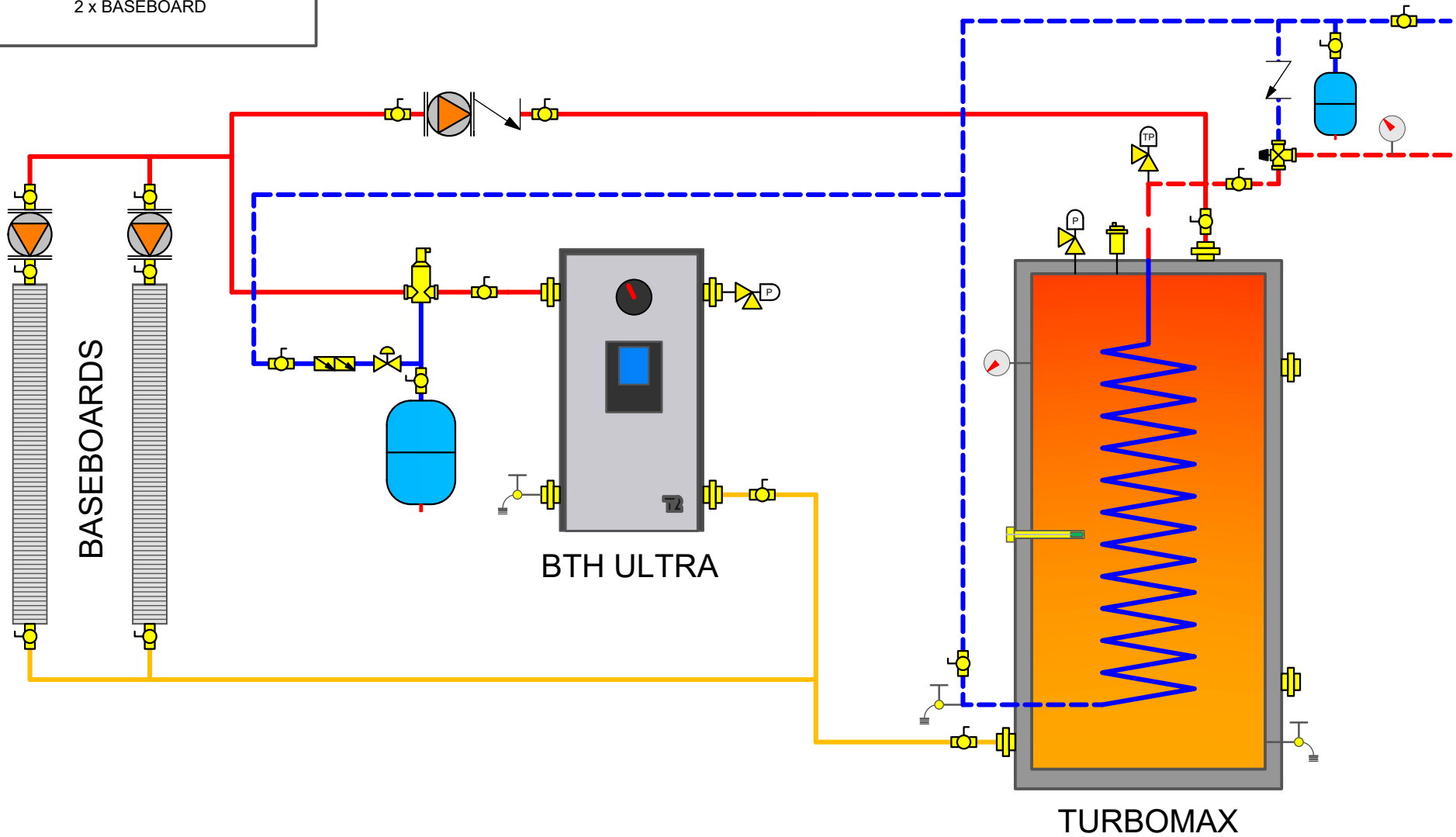

REQUIREMENTS

1. THE INSTALLATION MUST CONFORM TO LOCAL, STATE, PROVINCIAL, NATIONAL CODES. IN ANY CASE WHERE INSTRUCTIONS CONFLICT WITH THE ABOVE, LET THOSE CODES TAKE PRECEDENCE
2. THIS IS A BASIC PIPING SCHEMATIC. PLEASE CONSULT THE INSTALLATION MANUAL
3. INSTALL A SAFETY VALVE (TEMPERATURE & PRESSURE) ON THE DOMESTIC HOT WATER LINE, THE NEAREST POSSIBLE TO THE HOT WATER HEATER(S) CONNECTION(S) AND BEFORE ANY SHUT OFF VALVE
4. PIPE ALL THE SAFETY VALVES AND DRAIN VALVES TO THE DRAIN OR ACCORDINGLY TO THE CODE
5. WHEN A BACK FLOW PREVENTER OR WATER METER OR A PRESSURE REDUCING VAVLE IS USED ON THE DOMESTIC COLD WATER SUPPLY LINE, THEN A THERMAL EXPANSION TANK MUST BE INSTALLED BETWEEN THE WATER HEATER AND THIS DEVICE
6. THIS DRAWING IS NOT TO SCALE

SYMBOLS

- BALL VALVE
- CHECK VALVE
- BACK FLOW PREVENTER
- PRESSURE REDUCING VALVE
- DRAIN COCK
- BALANCING VALVE
- AUTOMATIC AIR VENT
- PUMP
- AIR SEPERATOR
- SENSOR WELL
- EXPANSION TANK
- THERMOMETER
- PRESSURE RELIEF VALVE
- TEMPERATURE & PRESSURE RELIEF VALVE
- THERMOSTATIC MIXING VALVE
- COLD WATER SUPPLY
- DOMESTIC PREHEATED WATER / DHW RECIRCULATION
- DOMESTIC HOT WATER
- HEATING HOT WATER/FLUID
- HEATING WATER/FLUID RETURN

BOILER CAPACITY : _____ BTU/H
MINIMUM REQUIRED NET CAPACITY : _____ BTU/H

PUMP CAPACITY : _____GPM @ _____ FEET OF HEAD

BOILER PIPE CONNECTION SIZE : _____ in
DHW TURBOMAZ PIPE CONNECTION SIZE : _____ in

BOILER MODEL : _____
TURBOMAX MODEL : _____

THERMO 2000
500 9th AVENUE
RICHMOND, QC, CA, J0B 2H0
T : 1 819 826-5613
F : 819 826-6370

BASIC INSTALLATION DRAWING
FOR:
1 x TURBOMAX
1 x BOILER
2 x BASEBOARD

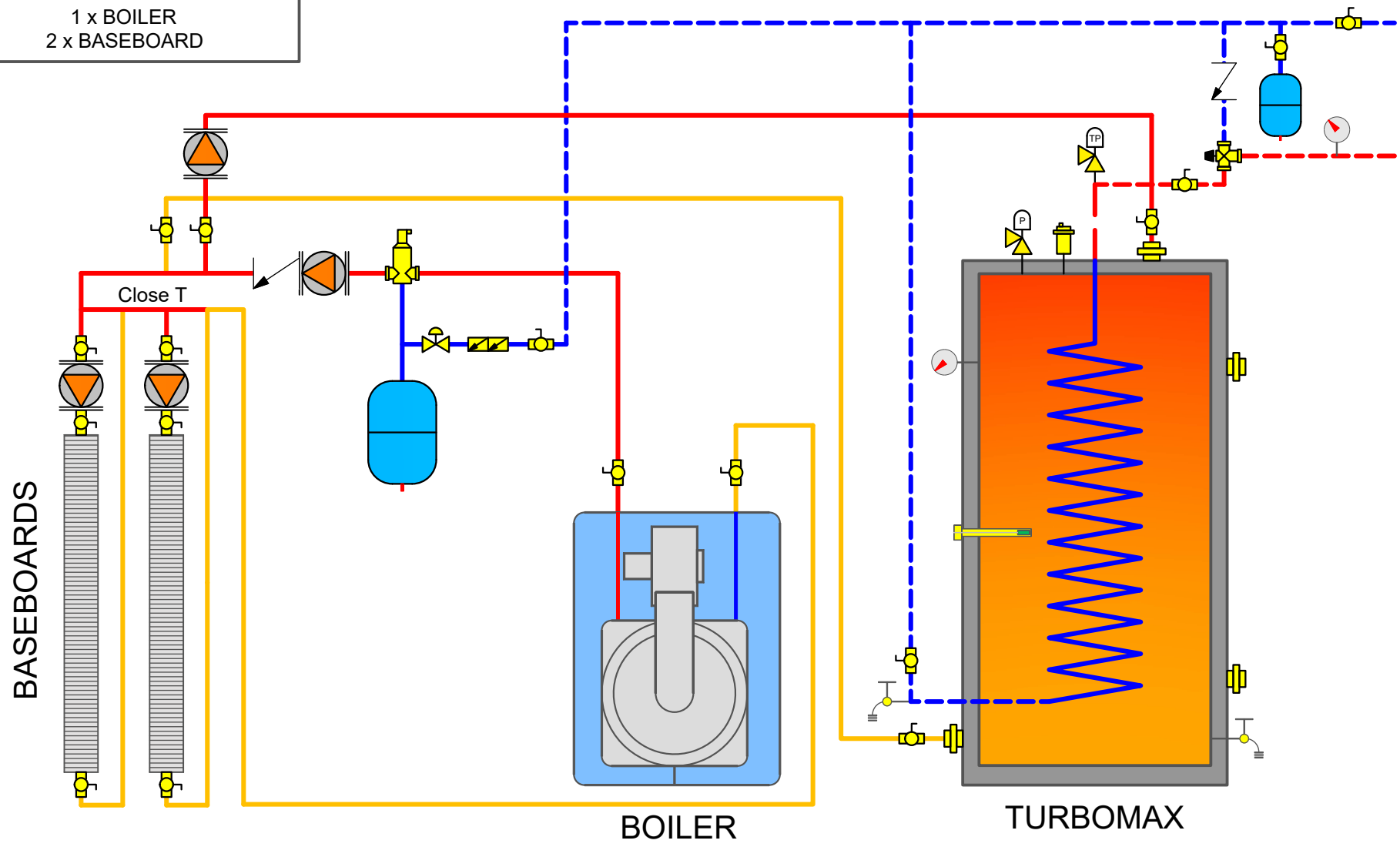

REQUIREMENTS

1. THE INSTALLATION MUST CONFORM TO LOCAL, STATE, PROVINCIAL, NATIONAL CODES. IN ANY CASE WHERE INSTRUCTIONS CONFLICT WITH THE ABOVE, LET THOSE CODES TAKE PRECEDENCE
2. THIS IS A BASIC PIPING SCHEMATIC. PLEASE CONSULT THE INSTALLATION MANUAL
3. INSTALL A SAFETY VALVE (TEMPERATURE & PRESSURE) ON THE DOMESTIC HOT WATER LINE, THE NEAREST POSSIBLE TO THE HOT WATER HEATER(S) CONNECTION(S) AND BEFORE ANY SHUT OFF VALVE
4. PIPE ALL THE SAFETY VALVES AND DRAIN VALVES TO THE DRAIN OR ACCORDINGLY TO THE CODE
5. WHEN A BACK FLOW PREVENTER OR WATER METER OR A PRESSURE REDUCING VAVLE IS USED ON THE DOMESTIC COLD WATER SUPPLY LINE, THEN A THERMAL EXPANSION TANK MUST BE INSTALLED BETWEEN THE WATER HEATER AND THIS DEVICE
6. THIS DRAWING IS NOT TO SCALE

SYMBOLS

- BALL VALVE
- CHECK VALVE
- BACK FLOW PREVENTER
- PRESSURE REDUCING VALVE
- DRAIN COCK
- BALANCING VALVE
- AUTOMATIC AIR VENT
- PUMP
- AIR SEPERATOR
- SENSOR WELL
- EXPANSION TANK
- THERMOMETER
- PRESSURE RELIEF VALVE
- TEMPERATURE & PRESSURE RELIEF VALVE
- THERMOSTATIC MIXING VALVE
- COLD WATER SUPPLY
- DOMESTIC PREHEATED WATER / DHW RECIRCULATION
- DOMESTIC HOT WATER
- HEATING HOT WATER/FLUID
- HEATING WATER/FLUID RETURN

BOILER CAPACITY : _____ BTU/H
MINIMUM REQUIRED NET CAPACITY : _____ BTU/H

PUMP CAPACITY : _____GPM @ _____ FEET OF HEAD

BOILER PIPE CONNECTION SIZE : _____ in
DHW TURBOMAZ PIPE CONNECTION SIZE : _____ in

BOILER MODEL : _____
TURBOMAX MODEL : _____

THERMO 2000
500 9th AVENUE
RICHMOND, QC, CA, J0B 2H0
T : 1 819 826-5613
F : 819 826-6370

BASIC INSTALLATION DRAWING FOR:
1 x TURBOMAX
1 x BOILER
2 x RADIANT FLOORS

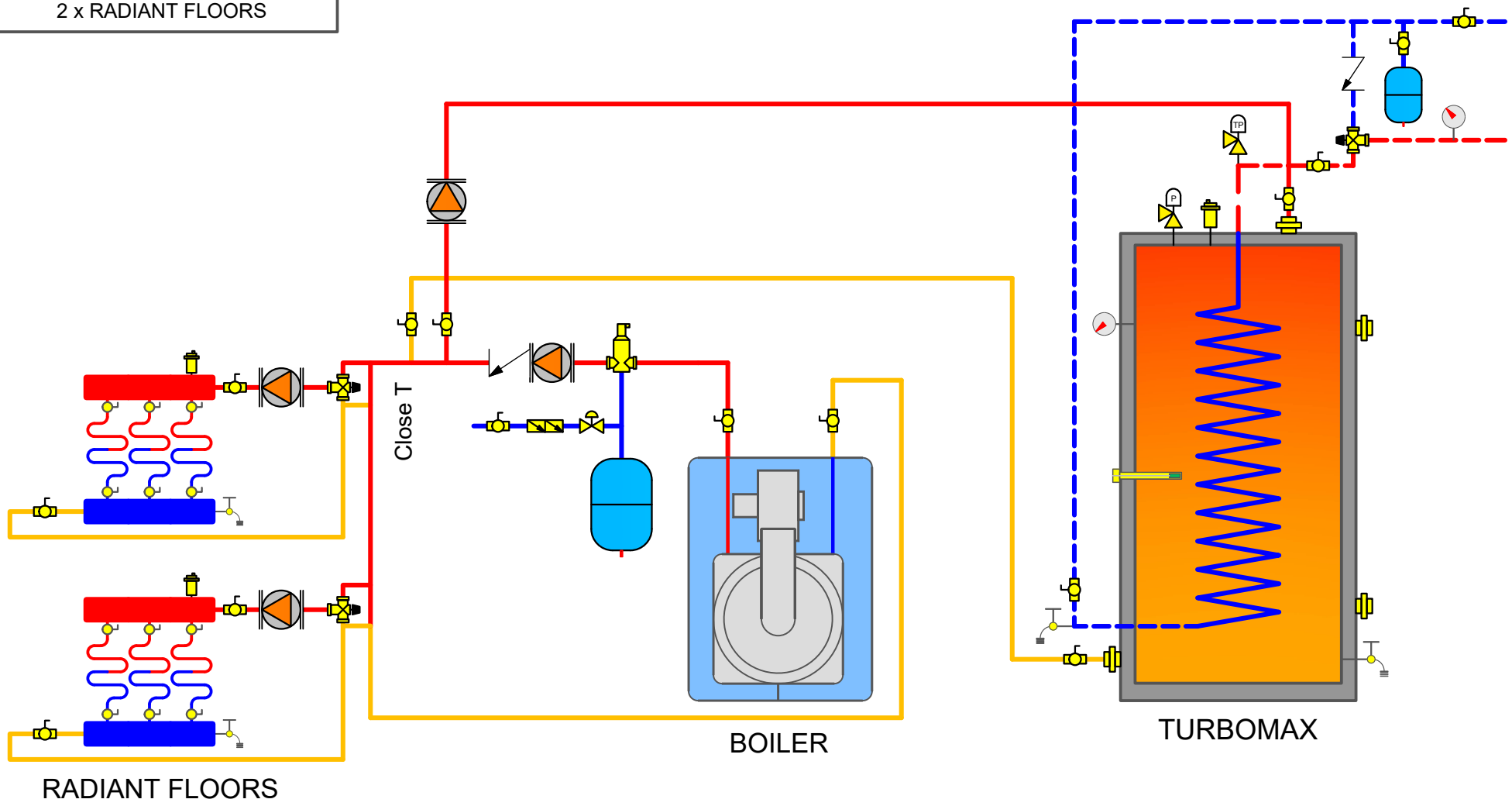

REQUIREMENTS

1. THE INSTALLATION MUST CONFORM TO LOCAL, STATE, PROVINCIAL, NATIONAL CODES. IN ANY CASE WHERE INSTRUCTIONS CONFLICT WITH THE ABOVE, LET THOSE CODES TAKE PRECEDENCE
2. THIS IS A BASIC PIPING SCHEMATIC. PLEASE CONSULT THE INSTALLATION MANUAL
3. INSTALL A SAFETY VALVE (TEMPERATURE & PRESSURE) ON THE DOMESTIC HOT WATER LINE, THE NEAREST POSSIBLE TO THE HOT WATER HEATER(S) CONNECTION(S) AND BEFORE ANY SHUT OFF VALVE
4. PIPE ALL THE SAFETY VALVES AND DRAIN VALVES TO THE DRAIN OR ACCORDINGLY TO THE CODE
5. WHEN A BACK FLOW PREVENTER OR WATER METER OR A PRESSURE REDUCING VAVLE IS USED ON THE DOMESTIC COLD WATER SUPPLY LINE, THEN A THERMAL EXPANSION TANK MUST BE INSTALLED BETWEEN THE WATER HEATER AND THIS DEVICE
6. THIS DRAWING IS NOT TO SCALE

SYMBOLS

- BALL VALVE
- CHECK VALVE
- BACK FLOW PREVENTER
- PRESSURE REDUCING VALVE
- DRAIN COCK
- BALANCING VALVE
- AUTOMATIC AIR VENT
- PUMP
- AIR SEPERATOR
- SENSOR WELL
- EXPANSION TANK
- THERMOMETER
- PRESSURE RELIEF VALVE
- TEMPERATURE & PRESSURE RELIEF VALVE
- THERMOSTATIC MIXING VALVE
- COLD WATER SUPPLY
- DOMESTIC PREHEATED WATER / DHW RECIRCULATION
- DOMESTIC HOT WATER
- HEATING HOT WATER/FLUID
- HEATING WATER/FLUID RETURN

BOILER CAPACITY : _____ BTU/H
MINIMUM REQUIRED NET CAPACITY : _____ BTU/H

PUMP CAPACITY : _____GPM @ _____ FEET OF HEAD

BOILER PIPE CONNECTION SIZE : _____ in
DHW TURBOMAZ PIPE CONNECTION SIZE : _____ in

BOILER MODEL : _____
TURBOMAX MODEL : _____

THERMO 2000
500 9th AVENUE
RICHMOND, QC, CA, J0B 2H0
T : 1 819 826-5613
F : 819 826-6370

BASIC INSTALLATION DRAWING FOR:
1 x TURBOMAX
1 x BOILER
2 x BASEBOARD

For this piping, it's required to have hot water priority. Here's two methods to do so :
1) Replace the factory aquastat by one with a dual output signal
2) Replace the manometer by a second aquastat

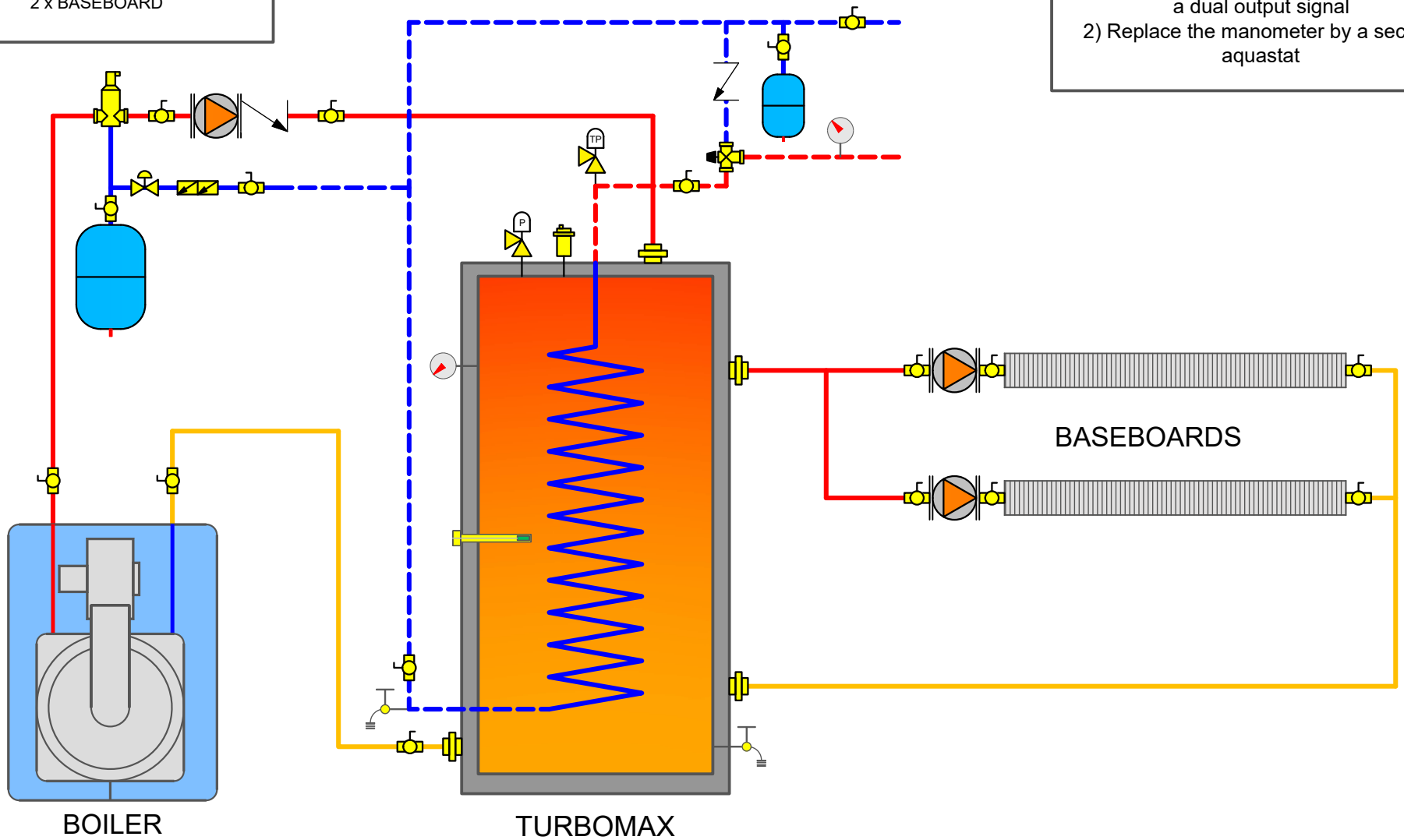

REQUIREMENTS

1. THE INSTALLATION MUST CONFORM TO LOCAL, STATE, PROVINCIAL, NATIONAL CODES. IN ANY CASE WHERE INSTRUCTIONS CONFLICT WITH THE ABOVE, LET THOSE CODES TAKE PRECEDENCE
2. THIS IS A BASIC PIPING SCHEMATIC. PLEASE CONSULT THE INSTALLATION MANUAL
3. INSTALL A SAFETY VALVE (TEMPERATURE & PRESSURE) ON THE DOMESTIC HOT WATER LINE, THE NEAREST POSSIBLE TO THE HOT WATER HEATER(S) CONNECTION(S) AND BEFORE ANY SHUT OFF VALVE
4. PIPE ALL THE SAFETY VALVES AND DRAIN VALVES TO THE DRAIN OR ACCORDINGLY TO THE CODE
5. WHEN A BACK FLOW PREVENTER OR WATER METER OR A PRESSURE REDUCING VAVLE IS USED ON THE DOMESTIC COLD WATER SUPPLY LINE, THEN A THERMAL EXPANSION TANK MUST BE INSTALLED BETWEEN THE WATER HEATER AND THIS DEVICE
6. THIS DRAWING IS NOT TO SCALE

SYMBOLS

BALL VALVE
CHECK VALVE
BACK FLOW PREVENTER
PRESSURE REDUCING VALVE
DRAIN COCK
BALANCING VALVE
AUTOMATIC AIR VENT
PUMP
AIR SEPERATOR
SENSOR WELL
EXPANSION TANK
THERMOMETER
PRESSURE RELIEF VALVE
TEMPERATURE & PRESSURE RELIEF VALVE
THERMOSTATIC MIXING VALVE
COLD WATER SUPPLY
DOMESTIC PREHEATED WATER / DHW RECIRCULATION
DOMESTIC HOT WATER
HEATING HOT WATER/FLUID
HEATING WATER/FLUID RETURN

BOILER CAPACITY : _____ BTU/H
MINIMUM REQUIRED NET CAPACITY : _____ BTU/H

PUMP CAPACITY : _____GPM @ _____ FEET OF HEAD

BOILER PIPE CONNECTION SIZE : _____ in
DHW TURBOMAZ PIPE CONNECTION SIZE : _____ in

BOILER MODEL : _____
TURBOMAX MODEL : _____

THERMO 2000
500 9th AVENUE
RICHMOND, QC, CA, J0B 2H0
T : 1 819 826-5613
F : 819 826-6370

BASIC INSTALLATION DRAWING FOR:
1 x TURBOMAX
1 x BOILER
2 x RADIANT FLOORS

For this piping, it's required to have hot water priority. Here's two methods to do so :
1) Replace the factory aquastat by one with a dual output signal
2) Replace the manometer by a second aquastat

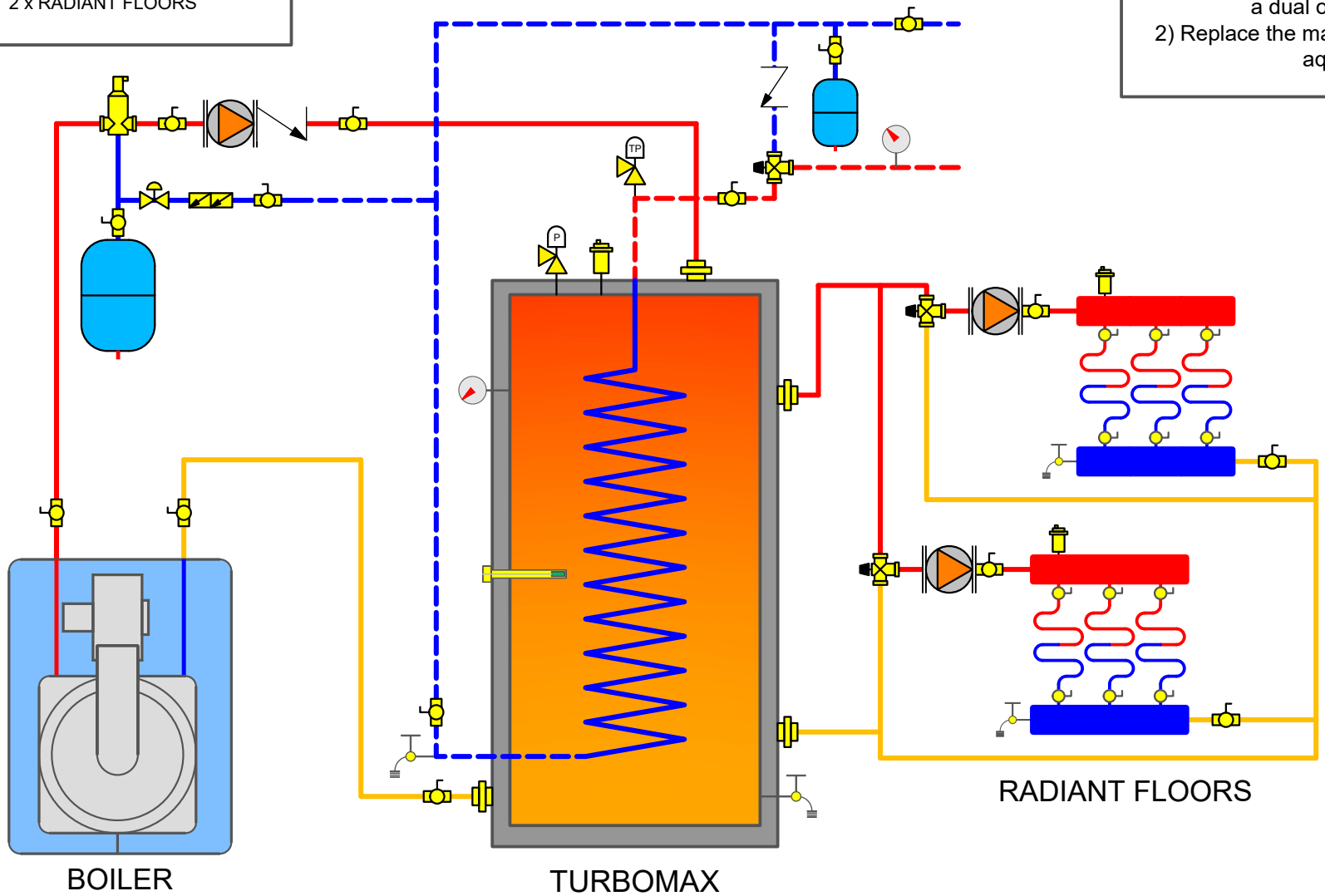

REQUIREMENTS

1. THE INSTALLATION MUST CONFORM TO LOCAL, STATE, PROVINCIAL, NATIONAL CODES. IN ANY CASE WHERE INSTRUCTIONS CONFLICT WITH THE ABOVE, LET THOSE CODES TAKE PRECEDENCE
2. THIS IS A BASIC PIPING SCHEMATIC. PLEASE CONSULT THE INSTALLATION MANUAL
3. INSTALL A SAFETY VALVE (TEMPERATURE & PRESSURE) ON THE DOMESTIC HOT WATER LINE, THE NEAREST POSSIBLE TO THE HOT WATER HEATER(S) CONNECTION(S) AND BEFORE ANY SHUT OFF VALVE
4. PIPE ALL THE SAFETY VALVES AND DRAIN VALVES TO THE DRAIN OR ACCORDINGLY TO THE CODE
5. WHEN A BACK FLOW PREVENTER OR WATER METER OR A PRESSURE REDUCING VAVLE IS USED ON THE DOMESTIC COLD WATER SUPPLY LINE, THEN A THERMAL EXPANSION TANK MUST BE INSTALLED BETWEEN THE WATER HEATER AND THIS DEVICE
6. THIS DRAWING IS NOT TO SCALE

SYMBOLS

- BALL VALVE
- CHECK VALVE
- BACK FLOW PREVENTER
- PRESSURE REDUCING VALVE
- DRAIN COCK
- BALANCING VALVE
- AUTOMATIC AIR VENT
- PUMP
- AIR SEPERATOR
- SENSOR WELL
- EXPANSION TANK
- THERMOMETER
- PRESSURE RELIEF VALVE
- TEMPERATURE & PRESSURE RELIEF VALVE
- THERMOSTATIC MIXING VALVE
- COLD WATER SUPPLY
- DOMESTIC PREHEATED WATER / DHW RECIRCULATION
- DOMESTIC HOT WATER
- HEATING HOT WATER/FLUID
- HEATING WATER/FLUID RETURN

BOILER CAPACITY : _____ BTU/H
MINIMUM REQUIRED NET CAPACITY : _____ BTU/H

PUMP CAPACITY : _____GPM @ _____ FEET OF HEAD

BOILER PIPE CONNECTION SIZE : _____ in
DHW TURBOMAZ PIPE CONNECTION SIZE : _____ in

BOILER MODEL : _____
TURBOMAX MODEL : _____

THERMO 2000
500 9th AVENUE
RICHMOND, QC, CA, J0B 2H0
T : 1 819 826-5613
F : 819 826-6370

BASIC INSTALLATION DRAWING FOR:
1 x TurboMax
1 x Boiler
1 x BuffMax
2 x Baseboards

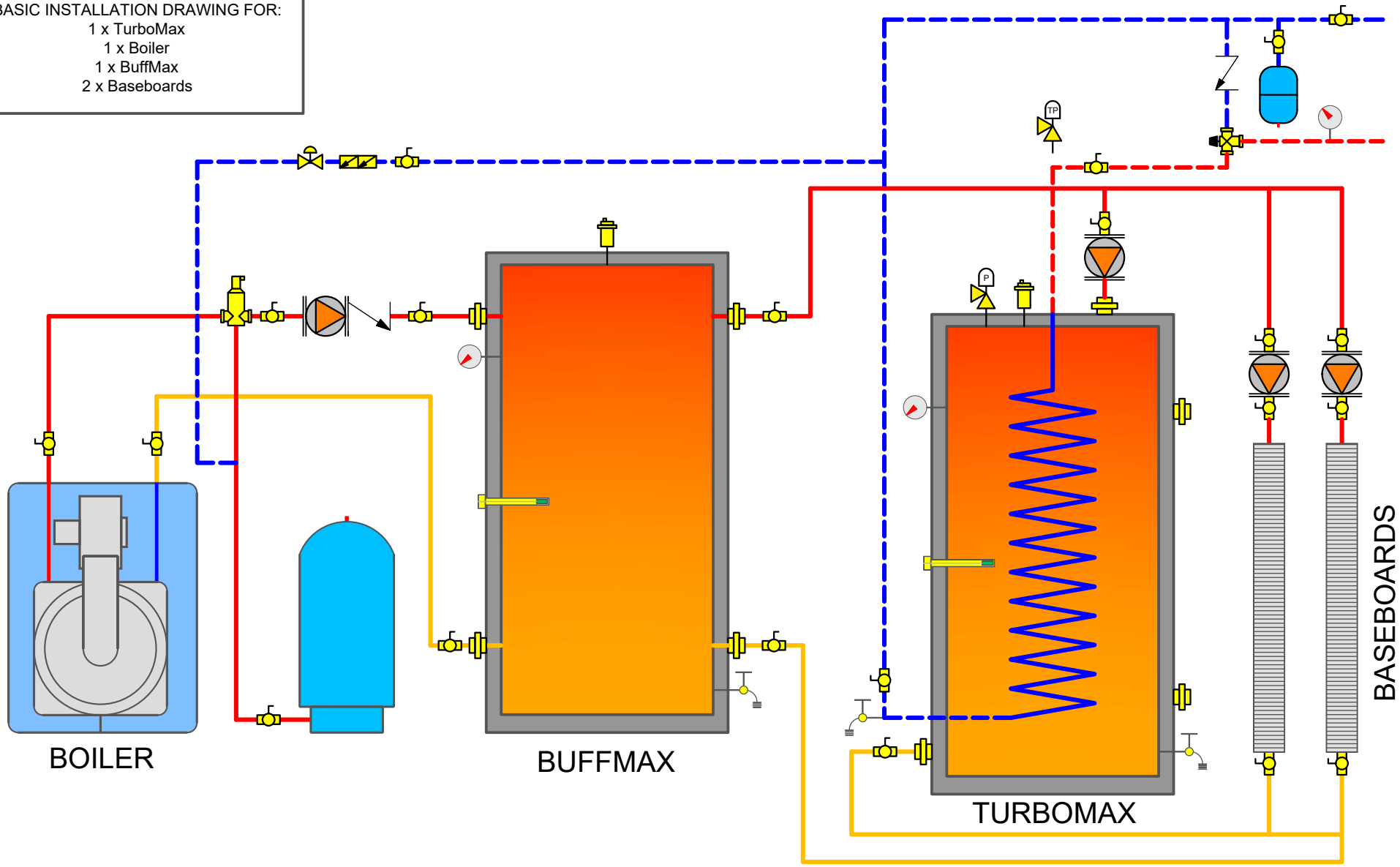

REQUIREMENTS

1. THE INSTALLATION MUST CONFORM TO LOCAL, STATE, PROVINCIAL, NATIONAL CODES. IN ANY CASE WHERE INSTRUCTIONS CONFLICT WITH THE ABOVE, LET THOSE CODES TAKE PRECEDENCE
2. THIS IS A BASIC PIPING SCHEMATIC. PLEASE CONSULT THE INSTALLATION MANUAL
3. INSTALL A SAFETY VALVE (TEMPERATURE & PRESSURE) ON THE DOMESTIC HOT WATER LINE, THE NEAREST POSSIBLE TO THE HOT WATER HEATER(S) CONNECTION(S) AND BEFORE ANY SHUT OFF VALVE
4. PIPE ALL THE SAFETY VALVES AND DRAIN VALVES TO THE DRAIN OR ACCORDINGLY TO THE CODE
5. WHEN A BACK FLOW PREVENTER OR WATER METER OR A PRESSURE REDUCING VAVLE IS USED ON THE DOMESTIC COLD WATER SUPPLY LINE, THEN A THERMAL EXPANSION TANK MUST BE INSTALLED BETWEEN THE WATER HEATER AND THIS DEVICE
6. THIS DRAWING IS NOT TO SCALE

SYMBOLS

- BALL VALVE
- CHECK VALVE
- BACK FLOW PREVENTER
- PRESSURE REDUCING VALVE
- DRAIN COCK
- BALANCING VALVE
- AUTOMATIC AIR VENT
- PUMP
- AIR SEPERATOR
- SENSOR WELL
- EXPANSION TANK
- THERMOMETER
- PRESSURE RELIEF VALVE
- TEMPERATURE & PRESSURE RELIEF VALVE
- THERMOSTATIC MIXING VALVE
- COLD WATER SUPPLY
- DOMESTIC PREHEATED WATER / DHW RECIRCULATION
- DOMESTIC HOT WATER
- HEATING HOT WATER/FLUID
- HEATING WATER/FLUID RETURN

BOILER CAPACITY : _____ BTU/H
MINIMUM REQUIRED NET CAPACITY : _____ BTU/H

PUMP CAPACITY : _____GPM @ _____ FEET OF HEAD

BOILER PIPE CONNECTION SIZE : _____ in
DHW TURBOMAZ PIPE CONNECTION SIZE : _____ in

BOILER MODEL : _____
TURBOMAX MODEL : _____

THERMO 2000
500 9th AVENUE
RICHMOND, QC, CA, J0B 2H0
T : 1 819 826-5613
F : 819 826-6370

BASIC INSTALLATION DRAWING FOR:
1 x TurboMax
1 x Boiler
1 x BuffMax
2 x RADIANT FLOORS

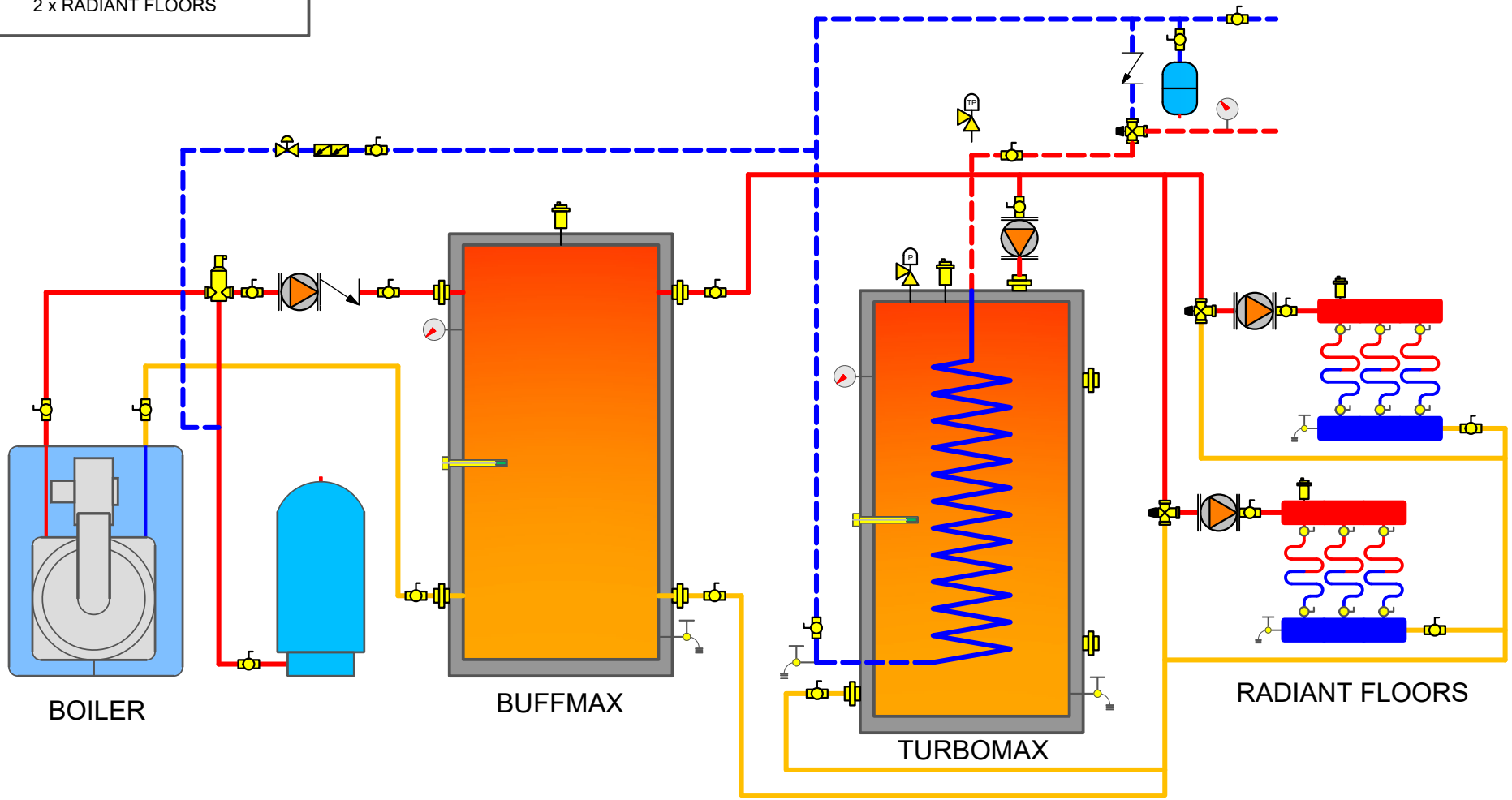

REQUIREMENTS

1. THE INSTALLATION MUST CONFORM TO LOCAL, STATE, PROVINCIAL, NATIONAL CODES. IN ANY CASE WHERE INSTRUCTIONS CONFLICT WITH THE ABOVE, LET THOSE CODES TAKE PRECEDENCE
2. THIS IS A BASIC PIPING SCHEMATIC. PLEASE CONSULT THE INSTALLATION MANUAL
3. INSTALL A SAFETY VALVE (TEMPERATURE & PRESSURE) ON THE DOMESTIC HOT WATER LINE, THE NEAREST POSSIBLE TO THE HOT WATER HEATER(S) CONNECTION(S) AND BEFORE ANY SHUT OFF VALVE
4. PIPE ALL THE SAFETY VALVES AND DRAIN VALVES TO THE DRAIN OR ACCORDINGLY TO THE CODE
5. WHEN A BACK FLOW PREVENTER OR WATER METER OR A PRESSURE REDUCING VAVLE IS USED ON THE DOMESTIC COLD WATER SUPPLY LINE, THEN A THERMAL EXPANSION TANK MUST BE INSTALLED BETWEEN THE WATER HEATER AND THIS DEVICE
6. THIS DRAWING IS NOT TO SCALE

SYMBOLS

- BALL VALVE
- CHECK VALVE
- BACK FLOW PREVENTER
- PRESSURE REDUCING VALVE
- DRAIN COCK
- BALANCING VALVE
- AUTOMATIC AIR VENT
- PUMP
- AIR SEPERATOR
- SENSOR WELL
- EXPANSION TANK
- THERMOMETER
- PRESSURE RELIEF VALVE
- TEMPERATURE & PRESSURE RELIEF VALVE
- THERMOSTATIC MIXING VALVE
- COLD WATER SUPPLY
- DOMESTIC PREHEATED WATER / DHW RECIRCULATION
- DOMESTIC HOT WATER
- HEATING HOT WATER/FLUID
- HEATING WATER/FLUID RETURN

BOILER CAPACITY : _____ BTU/H
MINIMUM REQUIRED NET CAPACITY : _____ BTU/H

PUMP CAPACITY : _____GPM @ _____ FEET OF HEAD

BOILER PIPE CONNECTION SIZE : _____ in
DHW TURBOMAZ PIPE CONNECTION SIZE : _____ in

BOILER MODEL : _____
TURBOMAX MODEL : _____

THERMO 2000
500 9th AVENUE
RICHMOND, QC, CA, J0B 2H0
T : 1 819 826-5613
F : 819 826-6370

BASIC INSTALLATION DRAWING FOR:
1 x TURBOMAX
1 x BOILER
1 x BTH ULTRA
2 x BASEBOARD

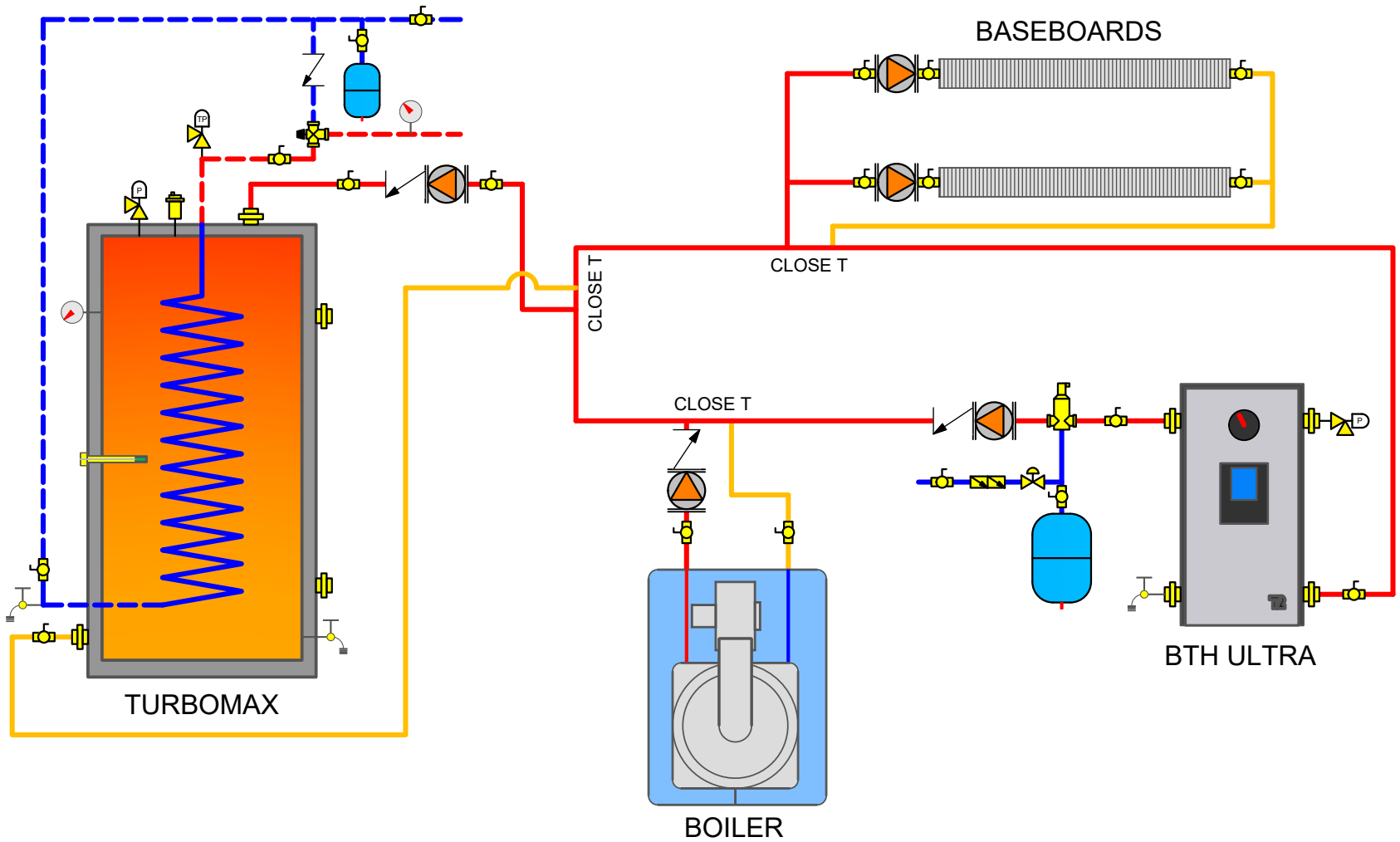

REQUIREMENTS

1. THE INSTALLATION MUST CONFORM TO LOCAL, STATE, PROVINCIAL, NATIONAL CODES. IN ANY CASE WHERE INSTRUCTIONS CONFLICT WITH THE ABOVE, LET THOSE CODES TAKE PRECEDENCE
2. THIS IS A BASIC PIPING SCHEMATIC. PLEASE CONSULT THE INSTALLATION MANUAL
3. INSTALL A SAFETY VALVE (TEMPERATURE & PRESSURE) ON THE DOMESTIC HOT WATER LINE, THE NEAREST POSSIBLE TO THE HOT WATER HEATER(S) CONNECTION(S) AND BEFORE ANY SHUT OFF VALVE
4. PIPE ALL THE SAFETY VALVES AND DRAIN VALVES TO THE DRAIN OR ACCORDINGLY TO THE CODE
5. WHEN A BACK FLOW PREVENTER OR WATER METER OR A PRESSURE REDUCING VAVLE IS USED ON THE DOMESTIC COLD WATER SUPPLY LINE, THEN A THERMAL EXPANSION TANK MUST BE INSTALLED BETWEEN THE WATER HEATER AND THIS DEVICE
6. THIS DRAWING IS NOT TO SCALE

SYMBOLS

BALL VALVE
CHECK VALVE
BACK FLOW PREVENTER
PRESSURE REDUCING VALVE
DRAIN COCK
BALANCING VALVE
AUTOMATIC AIR VENT
PUMP
AIR SEPERATOR
SENSOR WELL
EXPANSION TANK
THERMOMETER
PRESSURE RELIEF VALVE
TEMPERATURE & PRESSURE RELIEF VALVE
THERMOSTATIC MIXING VALVE
COLD WATER SUPPLY
DOMESTIC PREHEATED WATER / DHW RECIRCULATION
DOMESTIC HOT WATER
HEATING HOT WATER/FLUID
HEATING WATER/FLUID RETURN

BOILER CAPACITY : _____ BTU/H
MINIMUM REQUIRED NET CAPACITY : _____ BTU/H

PUMP CAPACITY : _____GPM @ _____ FEET OF HEAD

BOILER PIPE CONNECTION SIZE : _____ in
DHW TURBOMAZ PIPE CONNECTION SIZE : _____ in

BOILER MODEL : _____
TURBOMAX MODEL : _____

THERMO 2000
500 9th AVENUE
RICHMOND, QC, CA, J0B 2H0
T : 1 819 826-5613
F : 819 826-6370

BASIC INSTALLATION DRAWING FOR:
1 x TURBOMAX
1 x BOILER
1 x BTH ULTRA
2 x RADIANT FLOORS

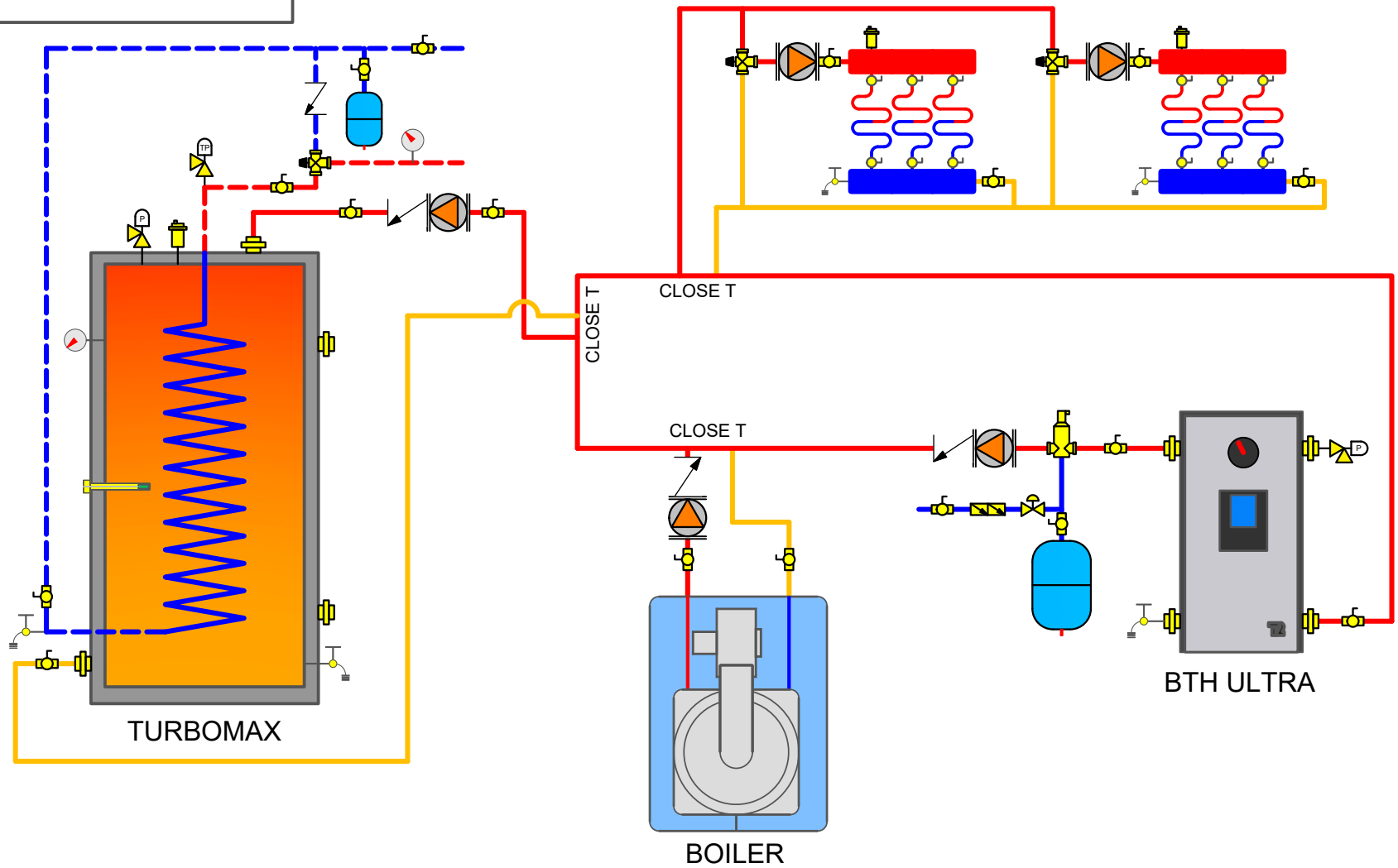

REQUIREMENTS

1. THE INSTALLATION MUST CONFORM TO LOCAL, STATE, PROVINCIAL, NATIONAL CODES. IN ANY CASE WHERE INSTRUCTIONS CONFLICT WITH THE ABOVE, LET THOSE CODES TAKE PRECEDENCE
2. THIS IS A BASIC PIPING SCHEMATIC. PLEASE CONSULT THE INSTALLATION MANUAL
3. INSTALL A SAFETY VALVE (TEMPERATURE & PRESSURE) ON THE DOMESTIC HOT WATER LINE, THE NEAREST POSSIBLE TO THE HOT WATER HEATER(S) CONNECTION(S) AND BEFORE ANY SHUT OFF VALVE
4. PIPE ALL THE SAFETY VALVES AND DRAIN VALVES TO THE DRAIN OR ACCORDINGLY TO THE CODE
5. WHEN A BACK FLOW PREVENTER OR WATER METER OR A PRESSURE REDUCING VAVLE IS USED ON THE DOMESTIC COLD WATER SUPPLY LINE, THEN A THERMAL EXPANSION TANK MUST BE INSTALLED BETWEEN THE WATER HEATER AND THIS DEVICE
6. THIS DRAWING IS NOT TO SCALE

SYMBOLS

BALL VALVE
CHECK VALVE
BACK FLOW PREVENTER
PRESSURE REDUCING VALVE
DRAIN COCK
BALANCING VALVE
AUTOMATIC AIR VENT
PUMP
AIR SEPERATOR
SENSOR WELL
EXPANSION TANK
THERMOMETER
PRESSURE RELIEF VALVE
TEMPERATURE & PRESSURE RELIEF VALVE
THERMOSTATIC MIXING VALVE
COLD WATER SUPPLY
DOMESTIC PREHEATED WATER / DHW RECIRCULATION
DOMESTIC HOT WATER
HEATING HOT WATER/FLUID
HEATING WATER/FLUID RETURN

BOILER CAPACITY : _____ BTU/H
MINIMUM REQUIRED NET CAPACITY : _____ BTU/H

PUMP CAPACITY : _____GPM @ _____ FEET OF HEAD

BOILER PIPE CONNECTION SIZE : _____ in
DHW TURBOMAZ PIPE CONNECTION SIZE : _____ in

BOILER MODEL : _____
TURBOMAX MODEL : _____

THERMO 2000
500 9th AVENUE
RICHMOND, QC, CA, J0B 2H0
T : 1 819 826-5613
F : 819 826-6370

BASIC INSTALLATION DRAWING FOR:
1 x TURBOMAX
1 x BOILER
1 x BTH ULTRA
2 x BASEBOARD

For this piping, it's required to have hot water priority. Here's two methods to do so :
1) Replace the factory aquastat by one with a dual output signal
2) Replace the manometer by a second aquastat

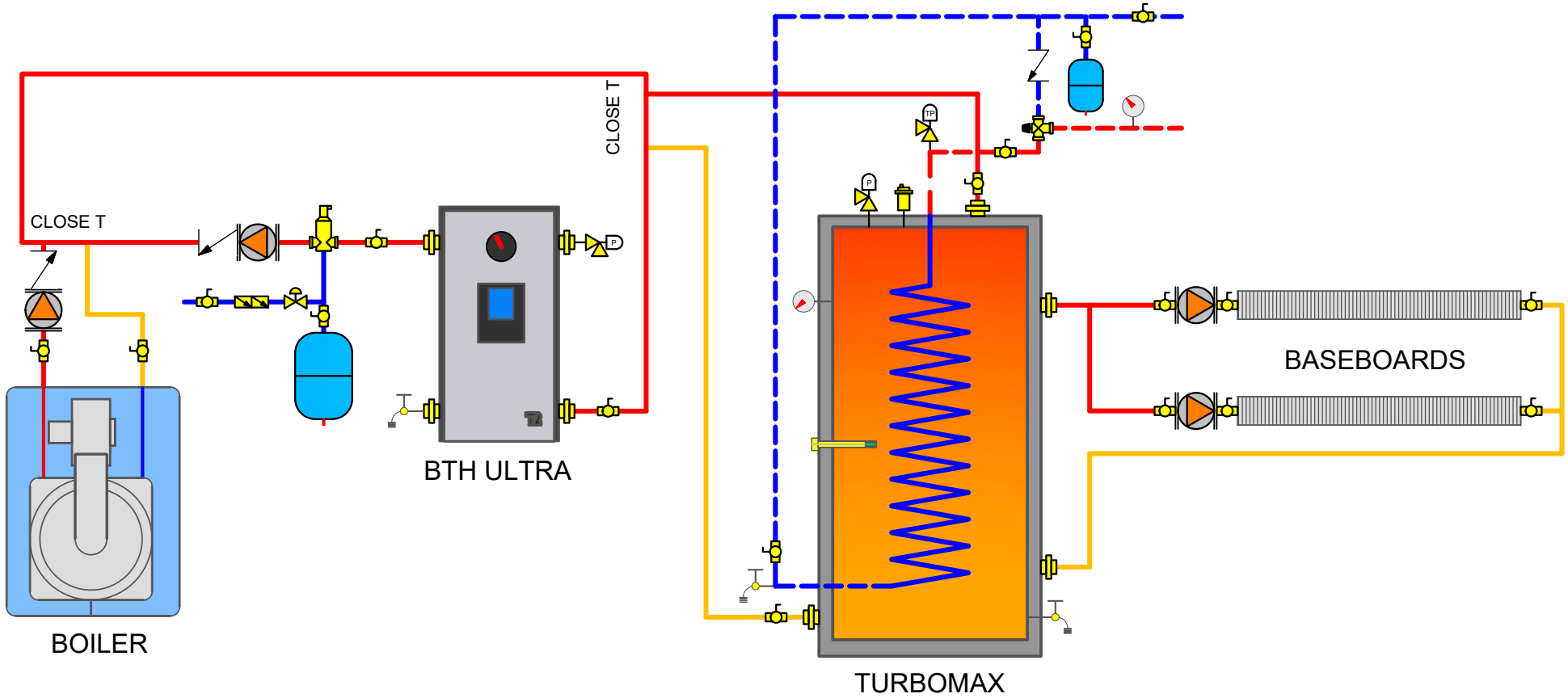

REQUIREMENTS

1. THE INSTALLATION MUST CONFORM TO LOCAL, STATE, PROVINCIAL, NATIONAL CODES. IN ANY CASE WHERE INSTRUCTIONS CONFLICT WITH THE ABOVE, LET THOSE CODES TAKE PRECEDENCE
2. THIS IS A BASIC PIPING SCHEMATIC. PLEASE CONSULT THE INSTALLATION MANUAL
3. INSTALL A SAFETY VALVE (TEMPERATURE & PRESSURE) ON THE DOMESTIC HOT WATER LINE, THE NEAREST POSSIBLE TO THE HOT WATER HEATER(S) CONNECTION(S) AND BEFORE ANY SHUT OFF VALVE
4. PIPE ALL THE SAFETY VALVES AND DRAIN VALVES TO THE DRAIN OR ACCORDINGLY TO THE CODE
5. WHEN A BACK FLOW PREVENTER OR WATER METER OR A PRESSURE REDUCING VAVLE IS USED ON THE DOMESTIC COLD WATER SUPPLY LINE, THEN A THERMAL EXPANSION TANK MUST BE INSTALLED BETWEEN THE WATER HEATER AND THIS DEVICE
6. THIS DRAWING IS NOT TO SCALE

SYMBOLS

BALL VALVE
CHECK VALVE
BACK FLOW PREVENTER
PRESSURE REDUCING VALVE
DRAIN COCK
BALANCING VALVE
AUTOMATIC AIR VENT
PUMP
AIR SEPERATOR
SENSOR WELL
EXPANSION TANK
THERMOMETER
PRESSURE RELIEF VALVE
TEMPERATURE & PRESSURE RELIEF VALVE
THERMOSTATIC MIXING VALVE
COLD WATER SUPPLY
DOMESTIC PREHEATED WATER / DHW RECIRCULATION
DOMESTIC HOT WATER
HEATING HOT WATER/FLUID
HEATING WATER/FLUID RETURN

BOILER CAPACITY : _____ BTU/H
MINIMUM REQUIRED NET CAPACITY : _____ BTU/H

PUMP CAPACITY : _____GPM @ _____ FEET OF HEAD

BOILER PIPE CONNECTION SIZE : _____ in
DHW TURBOMAZ PIPE CONNECTION SIZE : _____ in

BOILER MODEL : _____
TURBOMAX MODEL : _____

THERMO 2000
500 9th AVENUE
RICHMOND, QC, CA, J0B 2H0
T : 1 819 826-5613
F : 819 826-6370

BASIC INSTALLATION DRAWING FOR:
1 x TURBOMAX
1 x BOILER
1 x BTH ULTRA
2 x RADIANT FLOORS

For this piping, it's required to have hot water priority. Here's two methods to do so :
1) Replace the factory aquastat by one with a dual output signal
2) Replace the manometer by a second aquastat

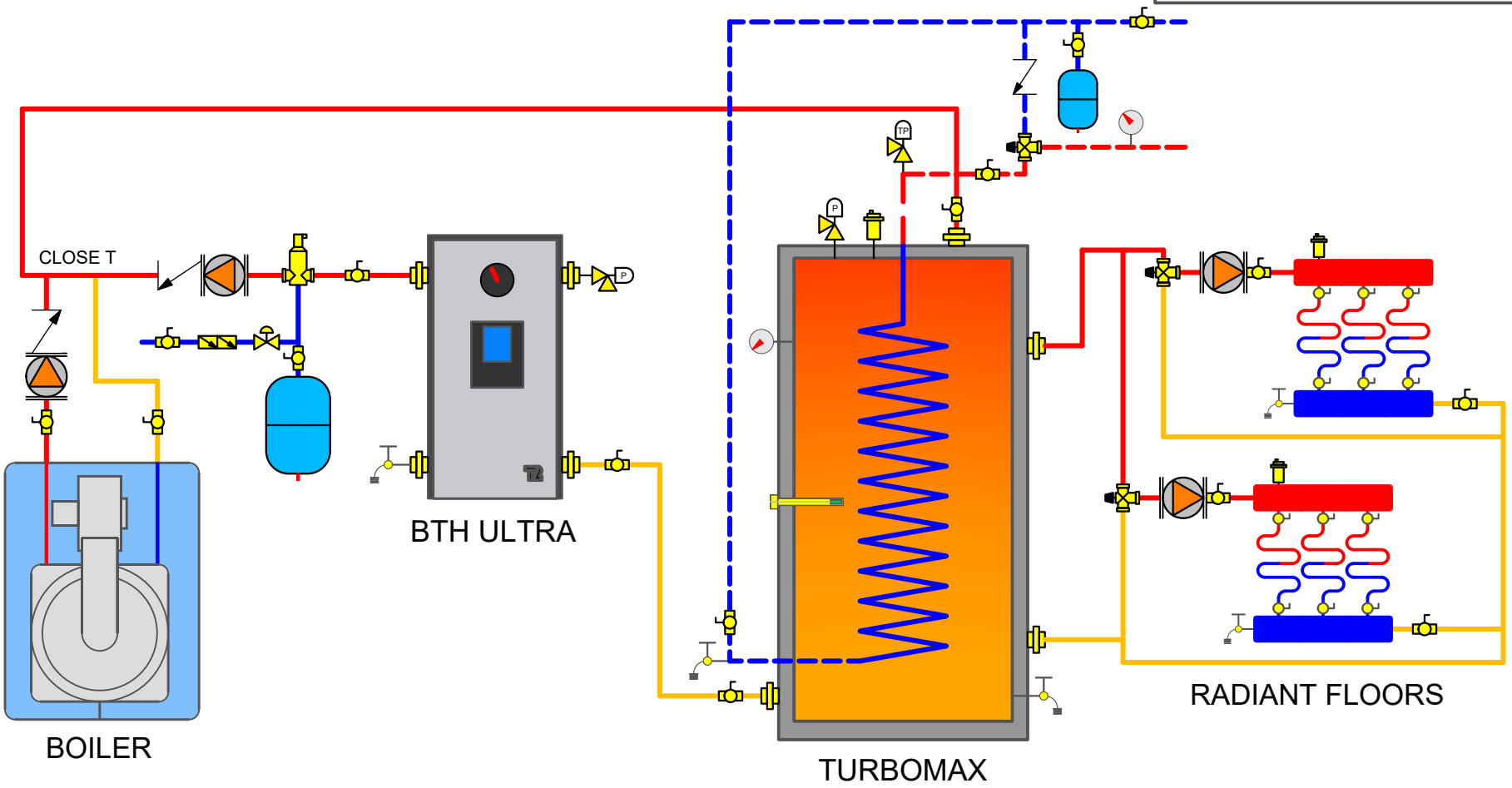

REQUIREMENTS

1. THE INSTALLATION MUST CONFORM TO LOCAL, STATE, PROVINCIAL, NATIONAL CODES. IN ANY CASE WHERE INSTRUCTIONS CONFLICT WITH THE ABOVE, LET THOSE CODES TAKE PRECEDENCE
2. THIS IS A BASIC PIPING SCHEMATIC. PLEASE CONSULT THE INSTALLATION MANUAL
3. INSTALL A SAFETY VALVE (TEMPERATURE & PRESSURE) ON THE DOMESTIC HOT WATER LINE, THE NEAREST POSSIBLE TO THE HOT WATER HEATER(S) CONNECTION(S) AND BEFORE ANY SHUT OFF VALVE
4. PIPE ALL THE SAFETY VALVES AND DRAIN VALVES TO THE DRAIN OR ACCORDINGLY TO THE CODE
5. WHEN A BACK FLOW PREVENTER OR WATER METER OR A PRESSURE REDUCING VAVLE IS USED ON THE DOMESTIC COLD WATER SUPPLY LINE, THEN A THERMAL EXPANSION TANK MUST BE INSTALLED BETWEEN THE WATER HEATER AND THIS DEVICE
6. THIS DRAWING IS NOT TO SCALE

SYMBOLS

- BALL VALVE
- CHECK VALVE
- BACK FLOW PREVENTER
- PRESSURE REDUCING VALVE
- DRAIN COCK
- BALANCING VALVE
- AUTOMATIC AIR VENT
- PUMP
- AIR SEPERATOR
- SENSOR WELL
- EXPANSION TANK
- THERMOMETER
- PRESSURE RELIEF VALVE
- TEMPERATURE & PRESSURE RELIEF VALVE
- THERMOSTATIC MIXING VALVE
- COLD WATER SUPPLY
- DOMESTIC PREHEATED WATER / DHW RECIRCULATION
- DOMESTIC HOT WATER
- HEATING HOT WATER/FLUID
- HEATING WATER/FLUID RETURN

BOILER CAPACITY : _____ BTU/H
MINIMUM REQUIRED NET CAPACITY : _____ BTU/H

PUMP CAPACITY : _____GPM @ _____ FEET OF HEAD

BOILER PIPE CONNECTION SIZE : _____ in
DHW TURBOMAZ PIPE CONNECTION SIZE : _____ in

BOILER MODEL : _____
TURBOMAX MODEL : _____

THERMO 2000
500 9th AVENUE
RICHMOND, QC, CA, J0B 2H0
T : 1 819 826-5613
F : 819 826-6370

PREHEATING DOMESTIC HOT WATER THROUGH A TURBOMAX USING A HEAT PUMP OR GEOTHERMAL APPLICATION

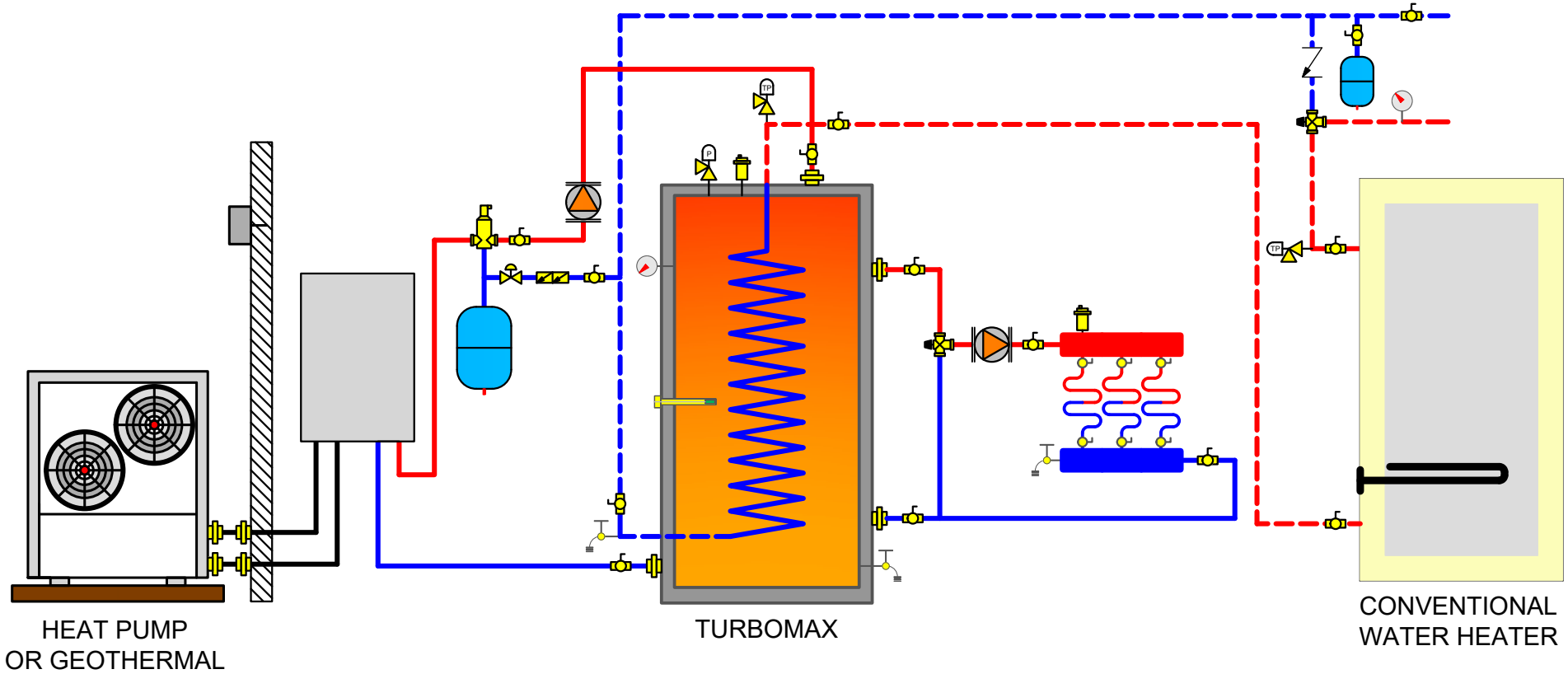

REQUIREMENTS

1. THE INSTALLATION MUST CONFORM TO LOCAL, STATE, PROVINCIAL, NATIONAL CODES. IN ANY CASE WHERE INSTRUCTIONS CONFLICT WITH THE ABOVE, LET THOSE CODES TAKE PRECEDENCE
2. THIS IS A BASIC PIPING SCHEMATIC. PLEASE CONSULT THE INSTALLATION MANUAL
3. INSTALL A SAFETY VALVE (TEMPERATURE & PRESSURE) ON THE DOMESTIC HOT WATER LINE, THE NEAREST POSSIBLE TO THE HOT WATER HEATER(S) CONNECTION(S) AND BEFORE ANY SHUT OFF VALVE
4. PIPE ALL THE SAFETY VALVES AND DRAIN VALVES TO THE DRAIN OR ACCORDINGLY TO THE CODE
5. WHEN A BACK FLOW PREVENTER OR WATER METER OR A PRESSURE REDUCING VAVLE IS USED ON THE DOMESTIC COLD WATER SUPPLY LINE, THEN A THERMAL EXPANSION TANK MUST BE INSTALLED BETWEEN THE WATER HEATER AND THIS DEVICE
6. THIS DRAWING IS NOT TO SCALE

SYMBOLS

- BALL VALVE
- CHECK VALVE
- BACK FLOW PREVENTER
- PRESSURE REDUCING VALVE
- DRAIN COCK
- BALANCING VALVE
- AUTOMATIC AIR VENT
- PUMP
- AIR SEPERATOR
- SENSOR WELL
- EXPANSION TANK
- THERMOMETER
- PRESSURE RELIEF VALVE
- TEMPERATURE & PRESSURE RELIEF VALVE
- THERMOSTATIC MIXING VALVE
- COLD WATER SUPPLY
- DOMESTIC PREHEATED WATER / DHW RECIRCULATION
- DOMESTIC HOT WATER
- HEATING HOT WATER/FLUID
- HEATING WATER/FLUID RETURN

BOILER CAPACITY : _____ BTU/H
MINIMUM REQUIRED NET CAPACITY : _____ BTU/H

PUMP CAPACITY : _____GPM @ _____ FEET OF HEAD

BOILER PIPE CONNECTION SIZE : _____ in
DHW TURBOMAZ PIPE CONNECTION SIZE : _____ in

BOILER MODEL : _____
TURBOMAX MODEL : _____

THERMO 2000
500 9th AVENUE
RICHMOND, QC, CA, J0B 2H0
T : 1 819 826-5613
F : 819 826-6370

BASIC INSTALLATION DRAWING FOR:
2 x BOILER
2 x TURBOMAX
WITH RECIRCULATION

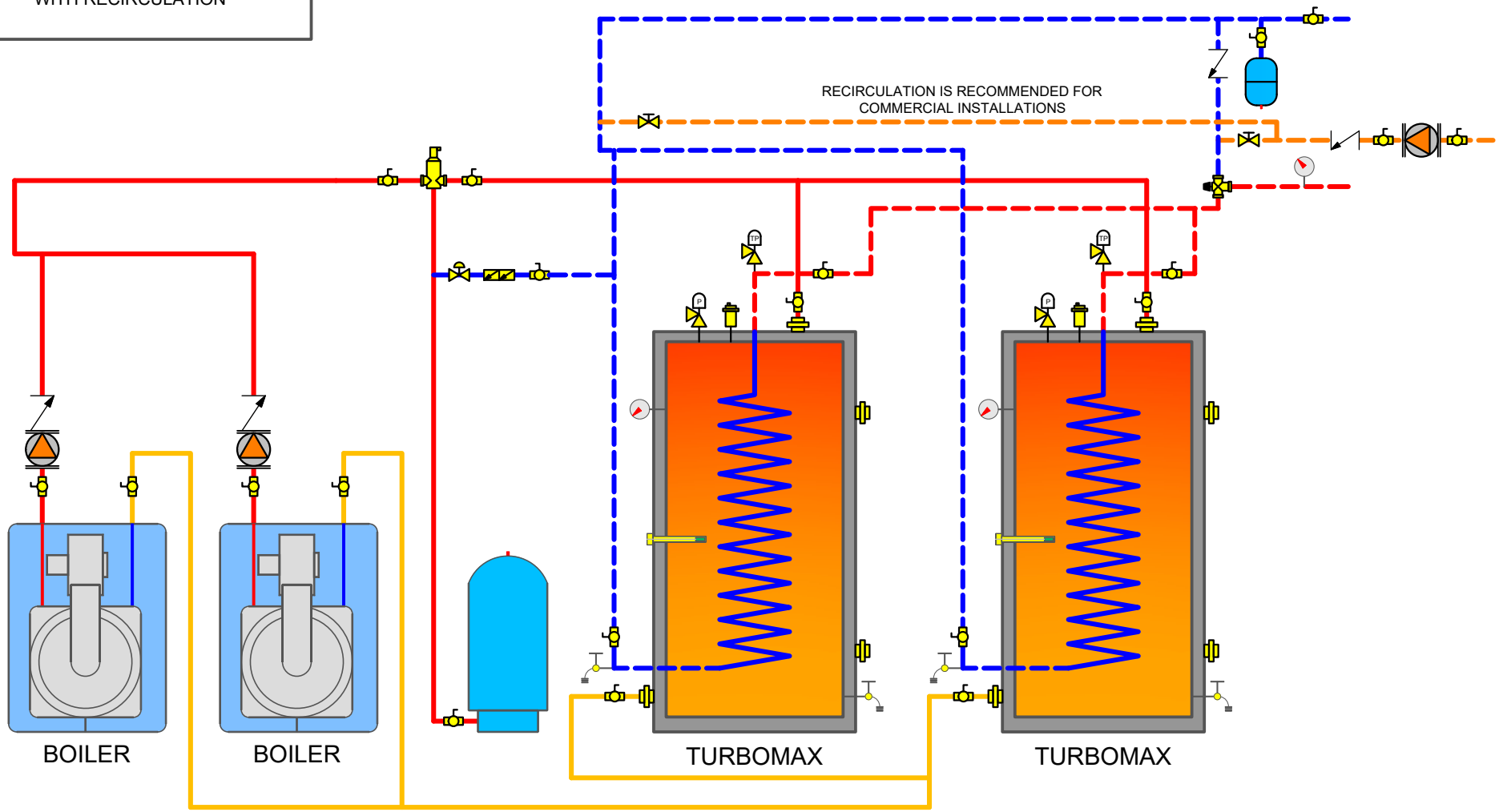

REQUIREMENTS

1. THE INSTALLATION MUST CONFORM TO LOCAL, STATE, PROVINCIAL, NATIONAL CODES. IN ANY CASE WHERE INSTRUCTIONS CONFLICT WITH THE ABOVE, LET THOSE CODES TAKE PRECEDENCE
2. THIS IS A BASIC PIPING SCHEMATIC. PLEASE CONSULT THE INSTALLATION MANUAL
3. INSTALL A SAFETY VALVE (TEMPERATURE & PRESSURE) ON THE DOMESTIC HOT WATER LINE, THE NEAREST POSSIBLE TO THE HOT WATER HEATER(S) CONNECTION(S) AND BEFORE ANY SHUT OFF VALVE
4. PIPE ALL THE SAFETY VALVES AND DRAIN VALVES TO THE DRAIN OR ACCORDINGLY TO THE CODE
5. WHEN A BACK FLOW PREVENTER OR WATER METER OR A PRESSURE REDUCING VAVLE IS USED ON THE DOMESTIC COLD WATER SUPPLY LINE, THEN A THERMAL EXPANSION TANK MUST BE INSTALLED BETWEEN THE WATER HEATER AND THIS DEVICE
6. THIS DRAWING IS NOT TO SCALE

SYMBOLS

BALL VALVE
CHECK VALVE
BACK FLOW PREVENTER
PRESSURE REDUCING VALVE
DRAIN COCK
BALANCING VALVE
AUTOMATIC AIR VENT
PUMP
AIR SEPERATOR
SENSOR WELL
EXPANSION TANK
THERMOMETER
PRESSURE RELIEF VALVE
TEMPERATURE & PRESSURE RELIEF VALVE
THERMOSTATIC MIXING VALVE
COLD WATER SUPPLY
DOMESTIC PREHEATED WATER / DHW RECIRCULATION
DOMESTIC HOT WATER
HEATING HOT WATER/FLUID
HEATING WATER/FLUID RETURN

BOILER CAPACITY : _____ BTU/H
MINIMUM REQUIRED NET CAPACITY : _____ BTU/H

PUMP CAPACITY : _____GPM @ _____ FEET OF HEAD

BOILER PIPE CONNECTION SIZE : _____ in
DHW TURBOMAZ PIPE CONNECTION SIZE : _____ in

BOILER MODEL : _____
TURBOMAX MODEL : _____

THERMO 2000
500 9th AVENUE
RICHMOND, QC, CA, J0B 2H0
T : 1 819 826-5613
F : 819 826-6370

PRIMARY/SECONDARY SETUP FOR :
2 x TURBOMAX
2 x BOILER
2 x BASEBOARD

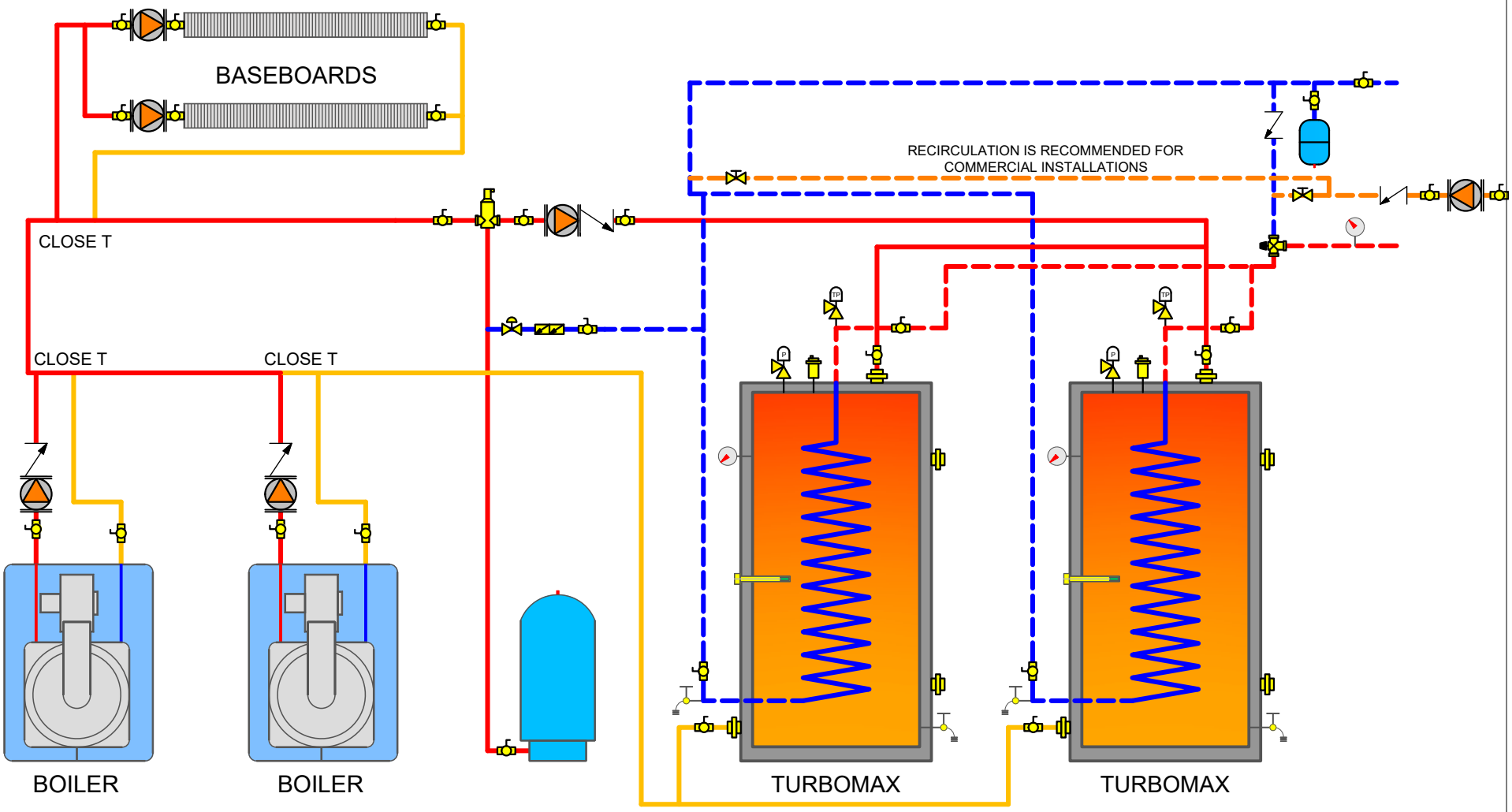

REQUIREMENTS

1. THE INSTALLATION MUST CONFORM TO LOCAL, STATE, PROVINCIAL, NATIONAL CODES. IN ANY CASE WHERE INSTRUCTIONS CONFLICT WITH THE ABOVE, LET THOSE CODES TAKE PRECEDENCE
2. THIS IS A BASIC PIPING SCHEMATIC. PLEASE CONSULT THE INSTALLATION MANUAL
3. INSTALL A SAFETY VALVE (TEMPERATURE & PRESSURE) ON THE DOMESTIC HOT WATER LINE, THE NEAREST POSSIBLE TO THE HOT WATER HEATER(S) CONNECTION(S) AND BEFORE ANY SHUT OFF VALVE
4. PIPE ALL THE SAFETY VALVES AND DRAIN VALVES TO THE DRAIN OR ACCORDINGLY TO THE CODE
5. WHEN A BACK FLOW PREVENTER OR WATER METER OR A PRESSURE REDUCING VAVLE IS USED ON THE DOMESTIC COLD WATER SUPPLY LINE, THEN A THERMAL EXPANSION TANK MUST BE INSTALLED BETWEEN THE WATER HEATER AND THIS DEVICE
6. THIS DRAWING IS NOT TO SCALE

SYMBOLS

BALL VALVE
CHECK VALVE
BACK FLOW PREVENTER
PRESSURE REDUCING VALVE
DRAIN COCK
BALANCING VALVE
AUTOMATIC AIR VENT
PUMP
AIR SEPERATOR
SENSOR WELL
EXPANSION TANK
THERMOMETER
PRESSURE RELIEF VALVE
TEMPERATURE & PRESSURE RELIEF VALVE
THERMOSTATIC MIXING VALVE
COLD WATER SUPPLY
DOMESTIC PREHEATED WATER / DHW RECIRCULATION
DOMESTIC HOT WATER
HEATING HOT WATER/FLUID
HEATING WATER/FLUID RETURN

BOILER CAPACITY : _____ BTU/H
MINIMUM REQUIRED NET CAPACITY : _____ BTU/H

PUMP CAPACITY : _____GPM @ _____ FEET OF HEAD

BOILER PIPE CONNECTION SIZE : _____ in
DHW TURBOMAZ PIPE CONNECTION SIZE : _____ in

BOILER MODEL : _____
TURBOMAX MODEL : _____

THERMO 2000
500 9th AVENUE
RICHMOND, QC, CA, J0B 2H0
T : 1 819 826-5613
F : 819 826-6370

BASIC INSTALLATION DRAWING FOR:
2 x VOLTMAX
2 x BASEBOARD
2 x TURBOMAX
WITH RECIRCULATION

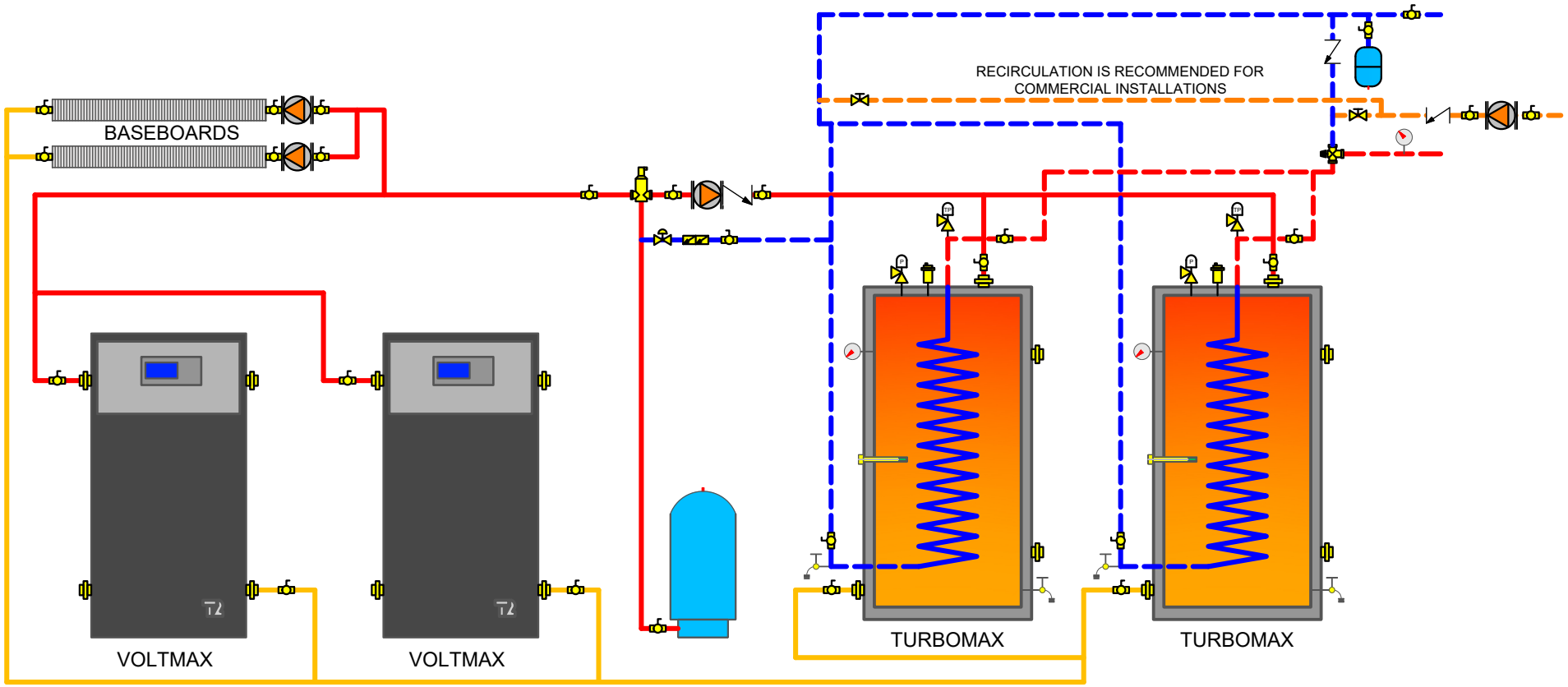

REQUIREMENTS

1. THE INSTALLATION MUST CONFORM TO LOCAL, STATE, PROVINCIAL, NATIONAL CODES. IN ANY CASE WHERE INSTRUCTIONS CONFLICT WITH THE ABOVE, LET THOSE CODES TAKE PRECEDENCE
2. THIS IS A BASIC PIPING SCHEMATIC. PLEASE CONSULT THE INSTALLATION MANUAL
3. INSTALL A SAFETY VALVE (TEMPERATURE & PRESSURE) ON THE DOMESTIC HOT WATER LINE, THE NEAREST POSSIBLE TO THE HOT WATER HEATER(S) CONNECTION(S) AND BEFORE ANY SHUT OFF VALVE
4. PIPE ALL THE SAFETY VALVES AND DRAIN VALVES TO THE DRAIN OR ACCORDINGLY TO THE CODE
5. WHEN A BACK FLOW PREVENTER OR WATER METER OR A PRESSURE REDUCING VAVLE IS USED ON THE DOMESTIC COLD WATER SUPPLY LINE, THEN A THERMAL EXPANSION TANK MUST BE INSTALLED BETWEEN THE WATER HEATER AND THIS DEVICE
6. THIS DRAWING IS NOT TO SCALE

SYMBOLS

- BALL VALVE
- CHECK VALVE
- BACK FLOW PREVENTER
- PRESSURE REDUCING VALVE
- DRAIN COCK
- BALANCING VALVE
- AUTOMATIC AIR VENT
- PUMP
- AIR SEPERATOR
- SENSOR WELL
- EXPANSION TANK
- THERMOMETER
- PRESSURE RELIEF VALVE
- TEMPERATURE & PRESSURE RELIEF VALVE
- THERMOSTATIC MIXING VALVE
- COLD WATER SUPPLY
- DOMESTIC PREHEATED WATER / DHW RECIRCULATION
- DOMESTIC HOT WATER
- HEATING HOT WATER/FLUID
- HEATING WATER/FLUID RETURN

BOILER CAPACITY : _____ BTU/H
MINIMUM REQUIRED NET CAPACITY : _____ BTU/H

PUMP CAPACITY : _____GPM @ _____ FEET OF HEAD

BOILER PIPE CONNECTION SIZE : _____ in
DHW TURBOMAZ PIPE CONNECTION SIZE : _____ in

BOILER MODEL : _____
TURBOMAX MODEL : _____

THERMO 2000
500 9th AVENUE
RICHMOND, QC, CA, J0B 2H0
T : 1 819 826-5613
F : 819 826-6370

PRIMARY/SECONDARY INSTALLATION:
1 x BOILER
1 x VOLTMAX
2 x BASEBOARD
2 x TURBOMAX
WITH RECIRCULATION

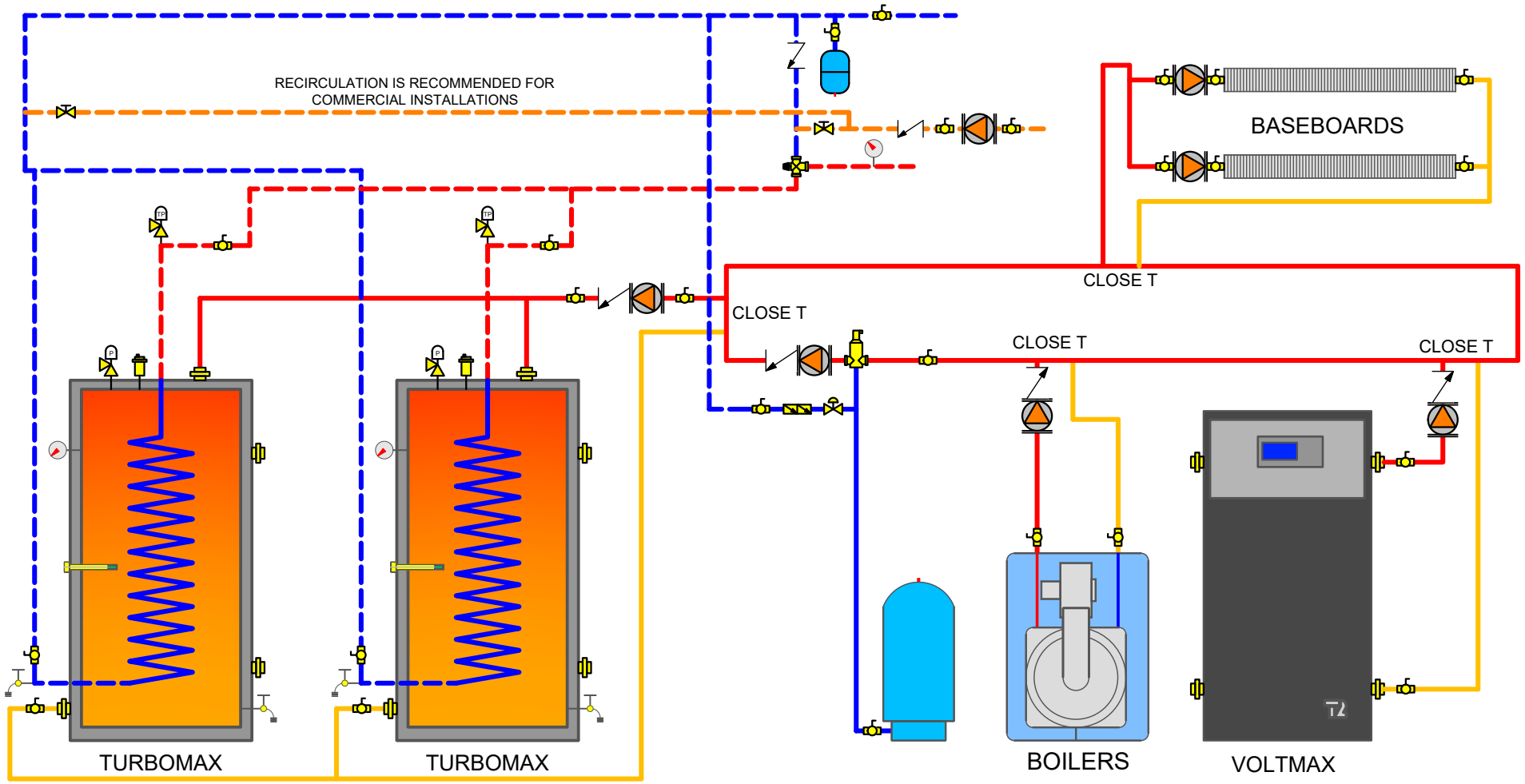

REQUIREMENTS

1. THE INSTALLATION MUST CONFORM TO LOCAL, STATE, PROVINCIAL, NATIONAL CODES. IN ANY CASE WHERE INSTRUCTIONS CONFLICT WITH THE ABOVE, LET THOSE CODES TAKE PRECEDENCE
2. THIS IS A BASIC PIPING SCHEMATIC. PLEASE CONSULT THE INSTALLATION MANUAL
3. INSTALL A SAFETY VALVE (TEMPERATURE & PRESSURE) ON THE DOMESTIC HOT WATER LINE, THE NEAREST POSSIBLE TO THE HOT WATER HEATER(S) CONNECTION(S) AND BEFORE ANY SHUT OFF VALVE
4. PIPE ALL THE SAFETY VALVES AND DRAIN VALVES TO THE DRAIN OR ACCORDINGLY TO THE CODE
5. WHEN A BACK FLOW PREVENTER OR WATER METER OR A PRESSURE REDUCING VAVLE IS USED ON THE DOMESTIC COLD WATER SUPPLY LINE, THEN A THERMAL EXPANSION TANK MUST BE INSTALLED BETWEEN THE WATER HEATER AND THIS DEVICE
6. THIS DRAWING IS NOT TO SCALE

SYMBOLS

BALL VALVE
CHECK VALVE
BACK FLOW PREVENTER
PRESSURE REDUCING VALVE
DRAIN COCK
BALANCING VALVE
AUTOMATIC AIR VENT
PUMP
AIR SEPERATOR
SENSOR WELL
EXPANSION TANK
THERMOMETER
PRESSURE RELIEF VALVE
TEMPERATURE & PRESSURE RELIEF VALVE
THERMOSTATIC MIXING VALVE
COLD WATER SUPPLY
DOMESTIC PREHEATED WATER / DHW RECIRCULATION
DOMESTIC HOT WATER
HEATING HOT WATER/FLUID
HEATING WATER/FLUID RETURN

BOILER CAPACITY : _____ BTU/H
MINIMUM REQUIRED NET CAPACITY : _____ BTU/H

PUMP CAPACITY : _____GPM @ _____ FEET OF HEAD

BOILER PIPE CONNECTION SIZE : _____ in
DHW TURBOMAZ PIPE CONNECTION SIZE : _____ in

BOILER MODEL : _____
TURBOMAX MODEL : _____

THERMO 2000
500 9th AVENUE
RICHMOND, QC, CA, J0B 2H0
T : 1 819 826-5613
F : 819 826-6370

BASIC INSTALLATION DRAWING FOR:
2 x VOLTMAX
2 x BUFFMAX
2 x BASEBOARD
2 x TURBOMAX
WITH RECIRCULATION

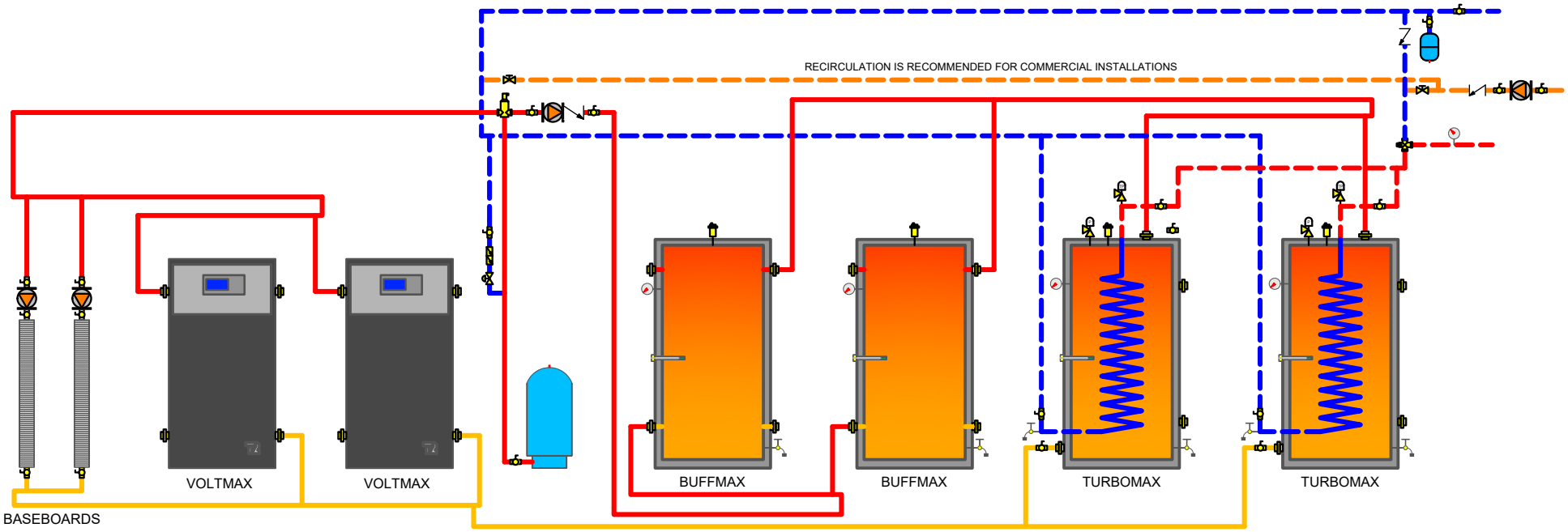

REQUIREMENTS

1. THE INSTALLATION MUST CONFORM TO LOCAL, STATE, PROVINCIAL, NATIONAL CODES. IN ANY CASE WHERE INSTRUCTIONS CONFLICT WITH THE ABOVE, LET THOSE CODES TAKE PRECEDENCE
2. THIS IS A BASIC PIPING SCHEMATIC. PLEASE CONSULT THE INSTALLATION MANUAL
3. INSTALL A SAFETY VALVE (TEMPERATURE & PRESSURE) ON THE DOMESTIC HOT WATER LINE, THE NEAREST POSSIBLE TO THE HOT WATER HEATER(S) CONNECTION(S) AND BEFORE ANY SHUT OFF VALVE
4. PIPE ALL THE SAFETY VALVES AND DRAIN VALVES TO THE DRAIN OR ACCORDINGLY TO THE CODE
5. WHEN A BACK FLOW PREVENTER OR WATER METER OR A PRESSURE REDUCING VAVLE IS USED ON THE DOMESTIC COLD WATER SUPPLY LINE, THEN A THERMAL EXPANSION TANK MUST BE INSTALLED BETWEEN THE WATER HEATER AND THIS DEVICE
6. THIS DRAWING IS NOT TO SCALE

SYMBOLS

BALL VALVE
CHECK VALVE
BACK FLOW PREVENTER
PRESSURE REDUCING VALVE
DRAIN COCK
BALANCING VALVE
AUTOMATIC AIR VENT
PUMP
AIR SEPERATOR
SENSOR WELL
EXPANSION TANK
THERMOMETER
PRESSURE RELIEF VALVE
TEMPERATURE & PRESSURE RELIEF VALVE
THERMOSTATIC MIXING VALVE
COLD WATER SUPPLY
DOMESTIC PREHEATED WATER / DHW RECIRCULATION
DOMESTIC HOT WATER
HEATING HOT WATER/FLUID
HEATING WATER/FLUID RETURN

BOILER CAPACITY : _____ BTU/H
MINIMUM REQUIRED NET CAPACITY : _____ BTU/H

PUMP CAPACITY : _____GPM @ _____ FEET OF HEAD

BOILER PIPE CONNECTION SIZE : _____ in
DHW TURBOMAZ PIPE CONNECTION SIZE : _____ in

BOILER MODEL : _____
TURBOMAX MODEL : _____

THERMO 2000
500 9th AVENUE
RICHMOND, QC, CA, J0B 2H0
T : 1 819 826-5613
F : 819 826-6370

BASIC INSTALLATION DRAWING FOR:
1 x TURBOMAX
1 x BOILER
1 x DHW TANK

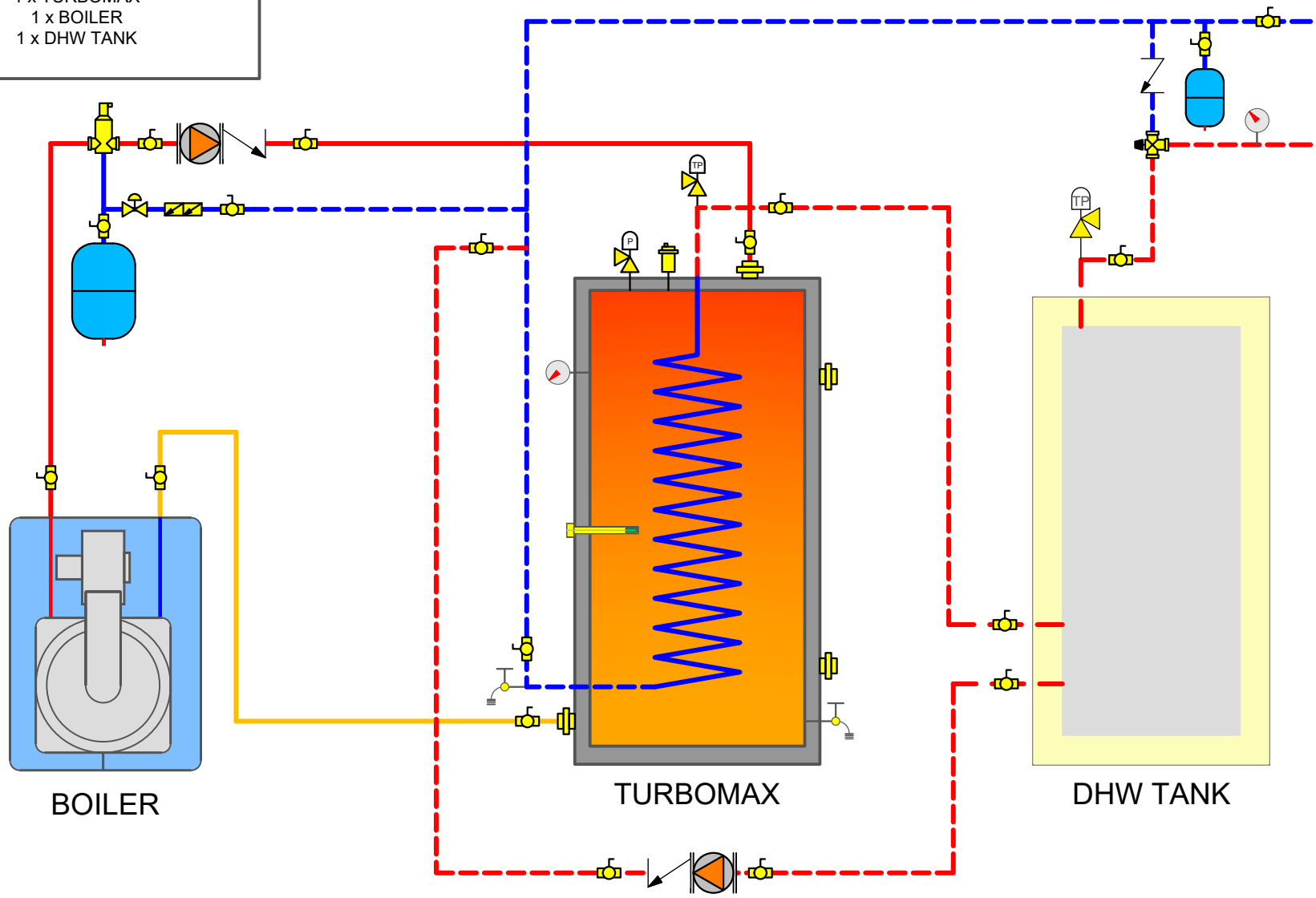

REQUIREMENTS

1. THE INSTALLATION MUST CONFORM TO LOCAL, STATE, PROVINCIAL, NATIONAL CODES. IN ANY CASE WHERE INSTRUCTIONS CONFLICT WITH THE ABOVE, LET THOSE CODES TAKE PRECEDENCE
2. THIS IS A BASIC PIPING SCHEMATIC. PLEASE CONSULT THE INSTALLATION MANUAL
3. INSTALL A SAFETY VALVE (TEMPERATURE & PRESSURE) ON THE DOMESTIC HOT WATER LINE, THE NEAREST POSSIBLE TO THE HOT WATER HEATER(S) CONNECTION(S) AND BEFORE ANY SHUT OFF VALVE
4. PIPE ALL THE SAFETY VALVES AND DRAIN VALVES TO THE DRAIN OR ACCORDINGLY TO THE CODE
5. WHEN A BACK FLOW PREVENTER OR WATER METER OR A PRESSURE REDUCING VAVLE IS USED ON THE DOMESTIC COLD WATER SUPPLY LINE, THEN A THERMAL EXPANSION TANK MUST BE INSTALLED BETWEEN THE WATER HEATER AND THIS DEVICE
6. THIS DRAWING IS NOT TO SCALE

SYMBOLS

- BALL VALVE
- CHECK VALVE
- BACK FLOW PREVENTER
- PRESSURE REDUCING VALVE
- DRAIN COCK
- BALANCING VALVE
- AUTOMATIC AIR VENT
- PUMP
- AIR SEPERATOR
- SENSOR WELL
- EXPANSION TANK
- THERMOMETER
- PRESSURE RELIEF VALVE
- TEMPERATURE & PRESSURE RELIEF VALVE
- THERMOSTATIC MIXING VALVE
- COLD WATER SUPPLY
- DOMESTIC PREHEATED WATER / DHW RECIRCULATION
- DOMESTIC HOT WATER
- HEATING HOT WATER/FLUID
- HEATING WATER/FLUID RETURN

BOILER CAPACITY : _____ BTU/H
MINIMUM REQUIRED NET CAPACITY : _____ BTU/H

PUMP CAPACITY : _____GPM @ _____ FEET OF HEAD

BOILER PIPE CONNECTION SIZE : _____ in
DHW TURBOMAZ PIPE CONNECTION SIZE : _____ in

BOILER MODEL : _____
TURBOMAX MODEL : _____

THERMO 2000
500 9th AVENUE
RICHMOND, QC, CA, J0B 2H0
T : 1 819 826-5613
F : 819 826-6370

BASIC INSTALLATION DRAWING FOR:
1 x TURBOMAX
1 x BOILER
1 x DHW TANK
2 x BASEBOARD

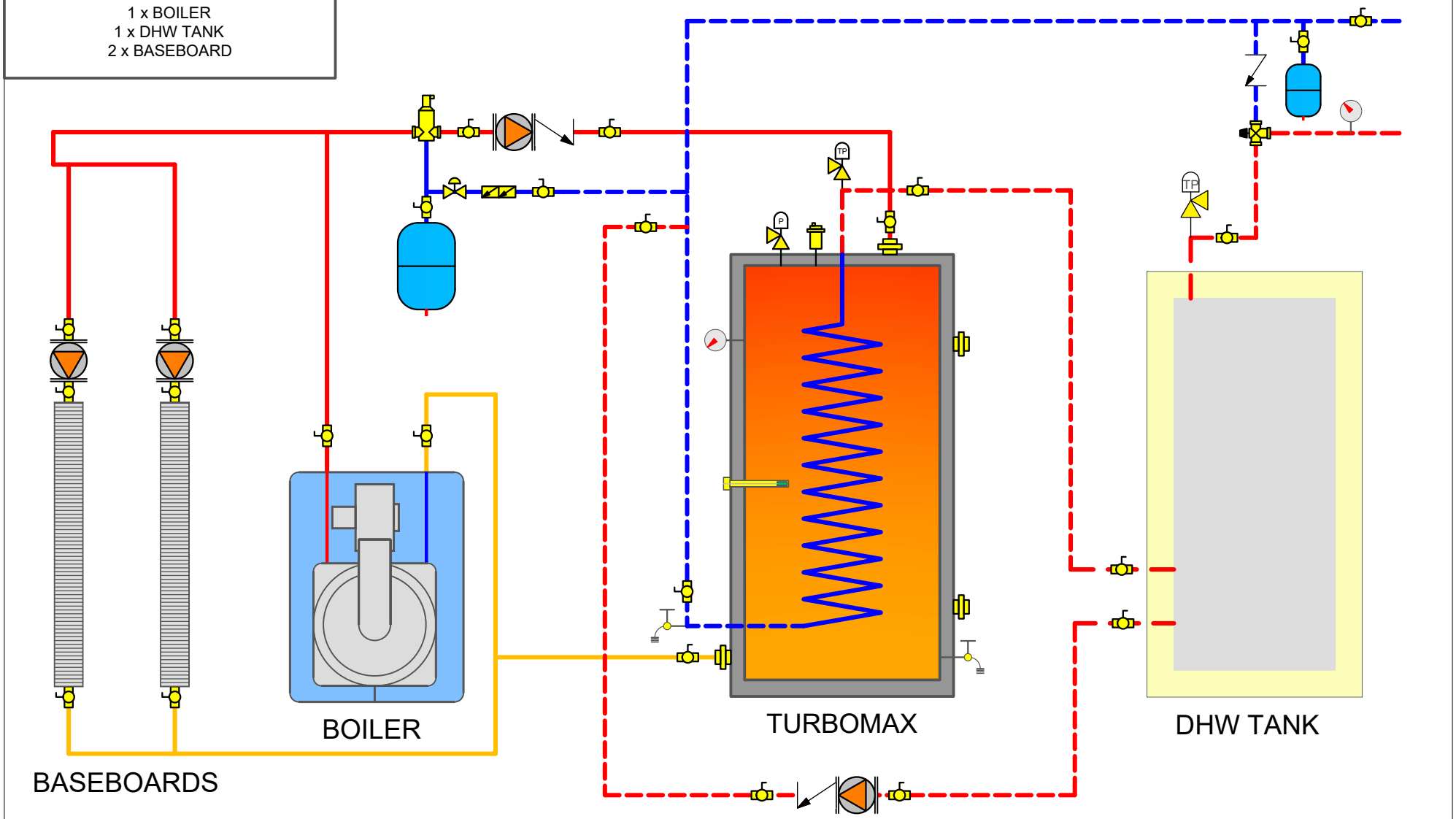

REQUIREMENTS

1. THE INSTALLATION MUST CONFORM TO LOCAL, STATE, PROVINCIAL, NATIONAL CODES. IN ANY CASE WHERE INSTRUCTIONS CONFLICT WITH THE ABOVE, LET THOSE CODES TAKE PRECEDENCE
2. THIS IS A BASIC PIPING SCHEMATIC. PLEASE CONSULT THE INSTALLATION MANUAL
3. INSTALL A SAFETY VALVE (TEMPERATURE & PRESSURE) ON THE DOMESTIC HOT WATER LINE, THE NEAREST POSSIBLE TO THE HOT WATER HEATER(S) CONNECTION(S) AND BEFORE ANY SHUT OFF VALVE
4. PIPE ALL THE SAFETY VALVES AND DRAIN VALVES TO THE DRAIN OR ACCORDINGLY TO THE CODE
5. WHEN A BACK FLOW PREVENTER OR WATER METER OR A PRESSURE REDUCING VAVLE IS USED ON THE DOMESTIC COLD WATER SUPPLY LINE, THEN A THERMAL EXPANSION TANK MUST BE INSTALLED BETWEEN THE WATER HEATER AND THIS DEVICE
6. THIS DRAWING IS NOT TO SCALE

SYMBOLS

BALL VALVE
CHECK VALVE
BACK FLOW PREVENTER
PRESSURE REDUCING VALVE
DRAIN COCK
BALANCING VALVE
AUTOMATIC AIR VENT
PUMP
AIR SEPERATOR
SENSOR WELL
EXPANSION TANK
THERMOMETER
PRESSURE RELIEF VALVE
TEMPERATURE & PRESSURE RELIEF VALVE
THERMOSTATIC MIXING VALVE
COLD WATER SUPPLY
DOMESTIC PREHEATED WATER / DHW RECIRCULATION
DOMESTIC HOT WATER
HEATING HOT WATER/FLUID
HEATING WATER/FLUID RETURN

BOILER CAPACITY : _____ BTU/H
MINIMUM REQUIRED NET CAPACITY : _____ BTU/H

PUMP CAPACITY : _____GPM @ _____ FEET OF HEAD

BOILER PIPE CONNECTION SIZE : _____ in
DHW TURBOMAZ PIPE CONNECTION SIZE : _____ in

BOILER MODEL : _____
TURBOMAX MODEL : _____

THERMO 2000
500 9th AVENUE
RICHMOND, QC, CA, J0B 2H0
T : 1 819 826-5613
F : 819 826-6370