Danze®

D236058
D228058T

SPECIFICATIONS

PARMA™ TRIM LINE SINGLE HANDLE LAVATORY FAUCET

Model

D236058
D228058T (w/o escutcheon)

Description

- Ceramic disc valve
- 4" high spout, 5" spout length
- Metal touch down drain assembly
- Single hole mount with optional deck plate

Standards

NSF Certified to NSF/ANSI 61 Section 9

- NSF 61-9
- Energy Policy Act of 1992

UPC NSF/ANSI 372

- ASME A112.18.1M/A112.18.1
- NSF/ANSI 372
- CSA B125.1

- ADA Accessibility Guidelines for Buildings and Facilities - 4.27.4 Controls and Mechanisms

Warranty

Danze products are covered by a manufacturer's limited "lifetime" warranty for manufacturing defects.

Flow Rate

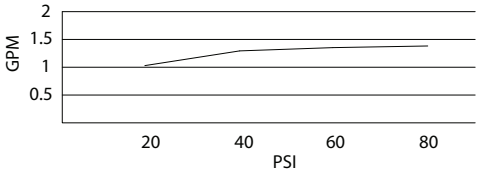

WaterSense Meets EPA Criteria
Certified by IAPMO R&T

Finishes Available

- Chrome
- Other: Refer to Price List for additional finish

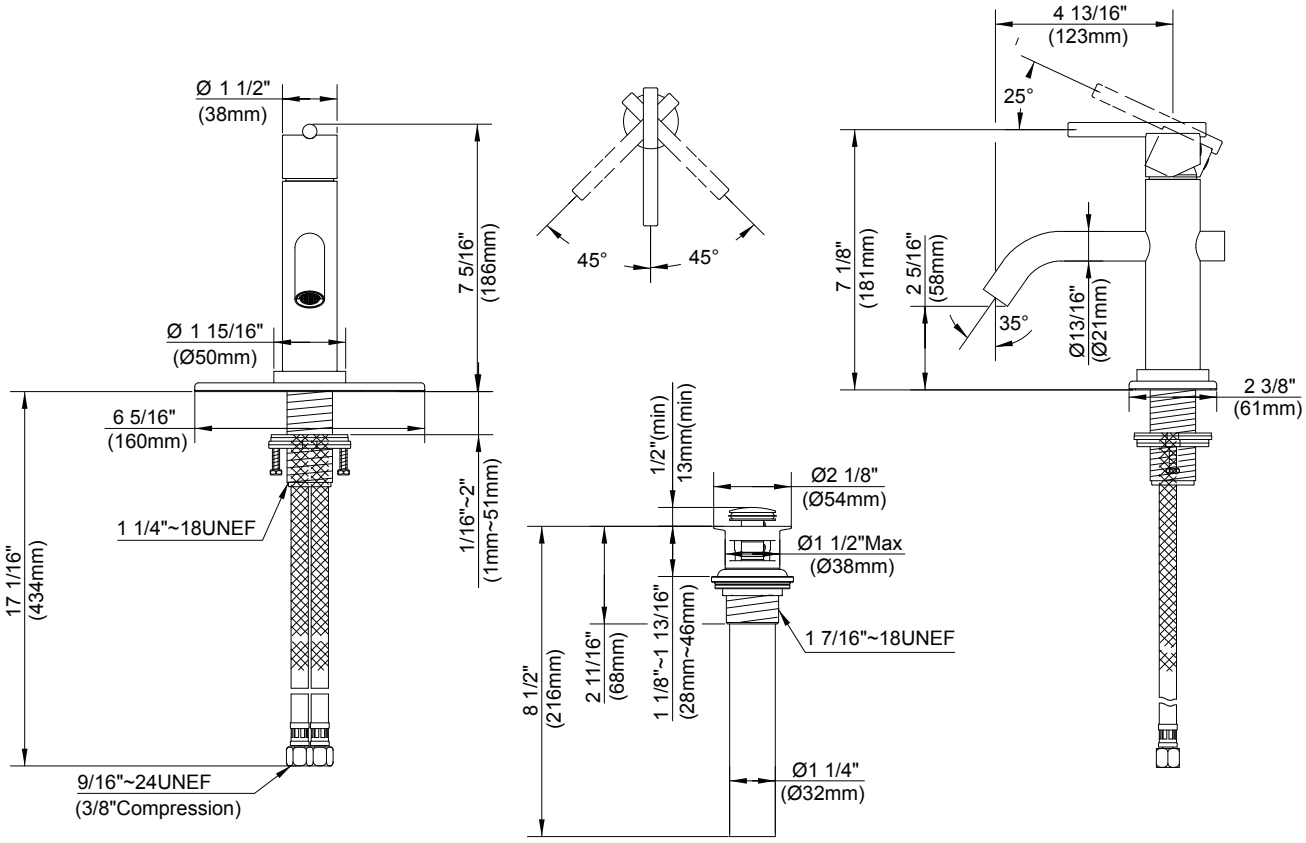

Submittal Information:

Job Name: _____ *Location:* _____

Contractor: _____ *Contact #:* _____